# PRO-FLO® 4

## ELECTRONIC FUEL INJECTION

# Installation Instructions

Edelbrock®

# TABLE OF CONTENTS

*Introduction* ..... *1-2*
*Tools and System Requirements* ..... *3*
*Fuel System Requirements* ..... *3-4*
*Primary Kit Components (4150)* ..... *5*
*Component Layout (4150)* ..... *6-7*
*Primary Kit Components (XT)* ..... *8*
*Component Layout (XT)* ..... *9-10*
*Main Harness Layout* ..... *11*
*Wideband Oxygen Sensor Installation* ..... *12*
*Checking Hood Clearance* ..... *13*
*Pro-Flo 4 Installation* ..... *14-18*
*Fan and Tach Outputs* ..... *18-19*
*Harness Schematics* ..... *20-25*
*Wiring w/ Pro-Flo Distributor & CDI Box* ..... *26*
*Pro-Flo 4 EFI Setup Wizard Map Matrix* ..... *27-28*
*Warranty* ..... *29*

**Please visit the Edelbrock Support Forum for the latest Pro-Flo 4 news and important updates:**
**https://forums.edelbrock.com/**

## INTRODUCTION

**Thank you for selecting the Edelbrock *Pro-Flo 4* EFI system. This is an electronic fuel injection system intended for V8 engines originally equipped with carburetors. The *Pro-Flo 4* EFI system can be paired via bluetooth connection with an exclusive tuning software, E-Tuner 4, which is available as a free app for most Android and IOS based tablets and smartphones. The use of a laptop PC is not required for tuning. The E-Tuner 4 app will enable real-time system performance monitoring and fine tuning adjustments. The *Pro-Flo 4* EFI system offers you the most bang for your buck, along with out-of-the-box performance from a name you can trust....Edelbrock!**

**If you have any questions, call our EFI Tech Support at: 800-416-8628, 7am-5pm PST, Monday through Friday.**

## IGNITION COIL SELECTION

**WARNING**

**IMPROPER COIL SELECTION MAY CAUSE SEVERE DAMAGE TO PRO FLO 4 ECU!**

The Edelbrock ***Pro-Flo 4*** EFI system has an internal coil driver capable of direct firing an inductive ignition coil. An inductive coil alone will support most applications without the need of a CDI box. Edelbrock ignition coil part #22746 is recommended. The following is a list of alternative coils that have been validated by Edelbrock to work well with the ***Pro-Flo 4*** system:

- MSD Blaster 2 #8202
- MSD Street Fire #5524
- Pertronix Flame-Thrower #40111
- Bosch "Blue Coil" #9220081083
- Jegs High Energy Ignition Coil #40105
- Summit Racing High Output Coil #G5215
- Summit Racing High Output Coil #G5219

If not using a coil from this list, ensure that the coil's primary resistance is at least 0.6 Ohms and inductance is at least 6.0mH. ***Pro-Flo 4*** can NOT directly fire low resistance, low inductance coils that are intended for use with a CDI box otherwise severe damage may result. Generally, acceptable coils are round cannister type. Unacceptable coils are typically square or dome type coils. If choosing to use a CDI type coil, a CDI box must also be used. Damage caused by improper coil selection is not covered under warranty. A CDI box is recommended for high horsepower and high rpm (>6,500 rpm) engines.

Note that Edelbrock ignition coils part #22740, #22741 & #22742 are intended for use with the Edelbrock Max-Fire distributors only and are NOT compatible with the ***Pro-Flo 4***. Using these coils with the ***Pro-Flo 4*** may damage the system.

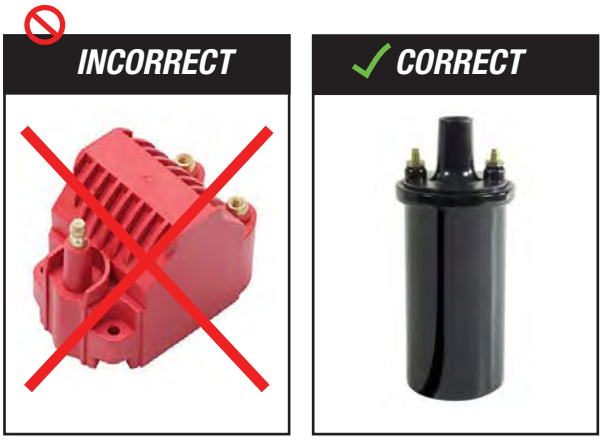


**WARNING**

**IMPROPER FUEL PUMP SELECTION MAY CAUSE SEVERE DAMAGE TO PRO FLO 4 ECU!**

## FUEL PUMP SELECTION

The ***Pro-Flo 4*** ECU is configured to directly power a fuel pump. The ECU's pump circuitry is rated for 10 Amps. Before connecting the fuel pump lead in the wiring harness to any fuel pump, the fuel pump's current draw rating must be checked – see pump manufacturer's specs for this information.

A conventional Walbro 255 LPH type pump or equivalent is typically acceptable. Many larger, high output performance fuel pumps will draw more than 10 Amps requiring the use of a relay. Damage caused by improper fuel pump selection is NOT covered under warranty. See FUEL SYSTEM REQUIREMENTS section for more information.

## ***E-TUNER 4*** SOFTWARE UPDATES

Edelbrock may periodically releases improved versions of the **E-Tuner 4** app software. These updates can include improvements to pre-installed calibrations, additional calibrations and updates to the user interface to improve the overall functionality of the software. It is recommended to check the Google and Apple App Stores or the Edelbrock website to verify that you have the most recent version of the app.

## IMPORTANT WARNINGS

**Before beginning the installation, verify that all components are present in the box. Inspect each component for damage that may have occurred in transit. If any parts are missing or damaged, contact Edelbrock Technical Support at (800) 416-8628, not your parts distributor.**

CAREFULLY STUDY AND UNDERSTAND ALL INSTRUCTIONS BEFORE BEGINNING THIS INSTALLATION.

***NOTE**: The installation can be accomplished using common tools and procedures. However, it is highly recommended to have a solid understanding of automotive repairs and modifications, and be familiar with and comfortable working on your vehicle and your vehicle's fuel system. If you do not feel comfortable working on your vehicle, it is recommended to have the installation completed by a professional mechanic.*

PROPER INSTALLATION IS THE RESPONSIBILITY OF THE INSTALLER. IMPROPER INSTALLATION WILL VOID ALL MANUFACTURER'S STANDARD WARRANTIES AND MAY RESULT IN POOR PERFORMANCE AND/OR DAMAGE TO THE ENGINE AND/OR VEHICLE.

***WARNING:** The Edelbrock **E-Tuner 4** Software is intended to be used as a hands-free tuning tool and gauge display. Any function that requires prolonged attention should only be performed after coming to a complete stop. Distracted driving is extremely dangerous and illegal in most states. If adjustments are to be made during driving, always stop the vehicle in a safe location before performing any adjustments, or have a passenger perform the necessary adjustments. Please check with your local laws for legal mounting locations in your vehicle.*

### O2 SENSOR INSTALLATION

It is suggested that the O2 sensor bung be installed by a professional muffler shop prior to the installation of the Edelbrock ***Pro-Flo 4*** EFI system. DO NOT drive the vehicle with the O2 sensor unplugged, sensor damage will occur. An O2 sensor bung plug is provided for your convenience. Refer to Page #12 for the O2 sensor installation procedure.

### EMISSION CONTROLS

The Edelbrock ***Pro-Flo 4*** EFI system will not accept stock emissions control systems. Check your local emissions laws for requirements before installing the ***Pro-Flo 4*** EFI system. This system is not legal for use on pollution-controlled motor vehicles.

### FUEL REQUIREMENTS

Because the ***Pro-Flo 4*** EFI system uses a wideband oxygen (O2) sensor, unleaded fuel must be used at all times. Using leaded fuels will damage the O2 sensor and void your warranty. If leaded fuel is present in your fuel tank, the tank must be drained and filled with unleaded fuel. It is also recommended to have a full fuel tank before operating the vehicle (after the installation).

***NOTE**: E85 fuels are not compatible with any **Pro-Flo 4** EFI systems.*

### AUTOMATIC TRANSMISSION CHECK

For best performance, economy, and emissions, the transmission kick down and shift points must be checked before and after the ***Pro-Flo 4*** EFI installation.

### SPARK PLUG WIRES

High EMI suppression spark plug wires are necessary, do not use solid core spark plug wires. Resistor type spark plugs are necessary.

### EXHAUSTS SYSTEM

For best results, headers are recommended. For the Self Tuning function to properly operate, the exhaust system must be completely sealed from header flange surface at cylinder heads to tailpipe. The exhaust system should be completely inspected prior to installing the ***Pro-Flo 4*** EFI system. All gaskets and hardware should be replaced. All hardware torques should be checked on regular basis.

### CHARGING SYSTEM

The ***Pro-Flo 4*** EFI System requires a constant battery voltage of 12.0 volts or greater to operate properly. Recommended battery capabilities are: 1000CA @32°F / 800CA @0°F. The vehicle's battery must be in good operating condition capable of maintaining a proper charge at all times. Verify the vehicle's charging system is operating properly and that the system voltage maintains 12.0 volts, or greater, at all times. All chassis grounds must be tight and clean. A ground cable from the engine block to chassis should be employed. All battery cables must be in good condition providing a clean tight connection to the battery.

**BATTERY CHARGER PRECAUTIONS:** PLEASE ADHERE TO THE FOLLOWING GUIDELINES OR DAMAGE TO ECU MAY OCCUR.

- Be sure the battery has a full charge prior to attempting to start the vehicle.
- Never use the "engine start or jump start" setting on a charger to start the engine.
- Do not set the battery charger above 10 amps when charging.
- Never turn on the ECU or attempt to start the engine with the battery charger connected
- Make sure the charger is not charging over 18.0 volts.
- If the battery is completely discharged, it is best to disconnect the negative terminal on the battery when charging.

## COOLING SYSTEM

The minimum temperature requirement for the thermostat is 180°F.

## TOOLS AND SYSTEM REQUIREMENTS

Use the following checklist for items needed.

- ❑ Wrench / Socket Set
- ❑ 7/8" Oxygen Sensor Socket or Equivalent
- ❑ Pliers (channel locks and hose clamp)
- ❑ Screwdrivers (Phillips and Flathead)
- ❑ Gasket Scraper or Equivalent
- ❑ Timing light
- ❑ Shop Rags
- ❑ Edelbrock Gasgacinch #9300
- ❑ Loctite 598 OEM High Temperature Silicone Gasket (O2 Sensor Compatible)
- ❑ Vehicle Wiring Diagram (if available)
- ❑ Thread Sealer
- ❑ High-Heat Anti-Seize Compound
- ❑ 180°F Thermostat
- ❑ Resistor Type Spark Plugs (Use correct heat range for your particular application)
- ❑ High EMI Suppression Spark Plug Wires (DO NOT use solid core spark plug wires)
- ❑ EFI Fuel System (See fuel system recommendation)
- ❑ Mechanical Fuel Pump Block Off Plate (Except for vehicles running a Fuel Sump System #3605, 3606, 3607 & 36052)
- ❑ Fuel fittings (Additional fittings may be required depending on routing preferences. Visit www.russell.com)
- ❑ 30 AMP Automotive Relay (If using electric fans - One relay required for each accessory)

## FUEL SYSTEM REQUIREMENTS

The ***Pro-Flo 4*** EFI system requires a high pressure fuel system providing 43-45 or 58-60 psi of fuel pressure with a minimum flow rating of 57 GPH (215 liter/hr). These fuel system requirements can support up to 600 HP. The following recommended options are available separately.

**NOTE:** Fuel pressure has a direct role in how much fuel is delivered to the engine when the injectors are opened. The higher the fuel pressure, the more fuel that is delivered during an injector opening event. It is critical for the proper operation of your fuel injection system that the fuel pressure matches the injector pulse widths demanded by the calibration for your specific application. For the recommended fuel pressure setting for your engine application, please refer to the ***Pro-Flo 4*** EFI setup Wizard Map Matrix on pages 27-28.

**Fuel Pressure Regulator Vacuum Reference:** The Fuel Pressure Regulator MUST reference manifold pressure to ensure a proper fuel pressure differential during an injector opening event under high vacuum conditions. The vacuum reference will lower fuel pressure slightly under idle and cruise conditions. The amount of pressure reduction will vary from engine to engine. During wide open throttle conditions, the fuel pressure should read the set point value of 43psi or 58psi depending on your application. The fuel pressure regulator should always be set to the target pressure with the vacuum reference hose disconnected from the Fuel Pressure Regulator. The hose from the manifold MUST be plugged to prevent a vacuum leak when setting the pressure. Remove the plug and reconnect the vacuum line to the fuel pressure regulator after target pressure is achieved.

## SUGGESTED EDELBROCK FUEL SYSTEM KITS

**Part Number 3604 Adjustable Return-Style EFI Fuel Kit:** Includes an inline 67 GPH (255 LPH) fuel pump, adjustable EFI fuel pressure regulator, pre-pump and post-pump fuel filters, twenty feet of 3/8" fuel injection fuel hose and all necessary fittings, mounts and clamps. Capable of supporting 600 HP.

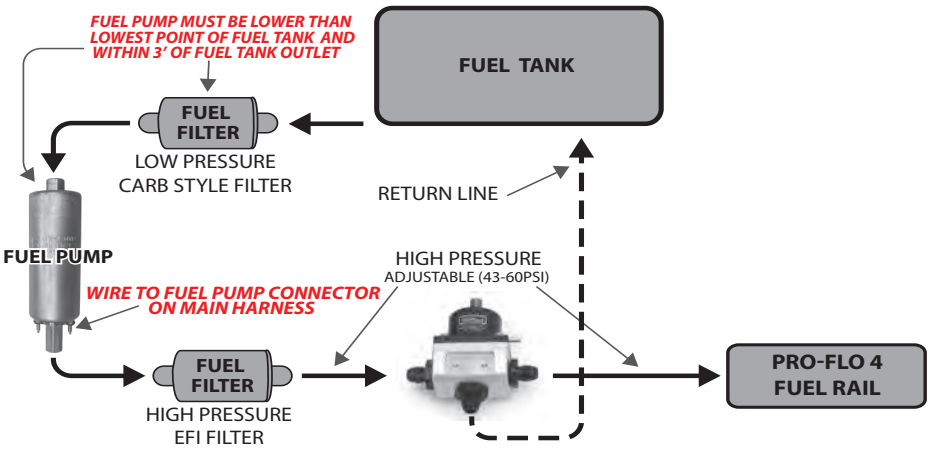


**Part Number 36031 Universal EFI Fuel Sump System:** Equipped with an internal 67 GPH (255 LPH) fuel pump and adjustable fuel pressure regulator. Uses engines stock mechanical fuel pump to provide fuel to the internal high pressure EFI fuel pump.

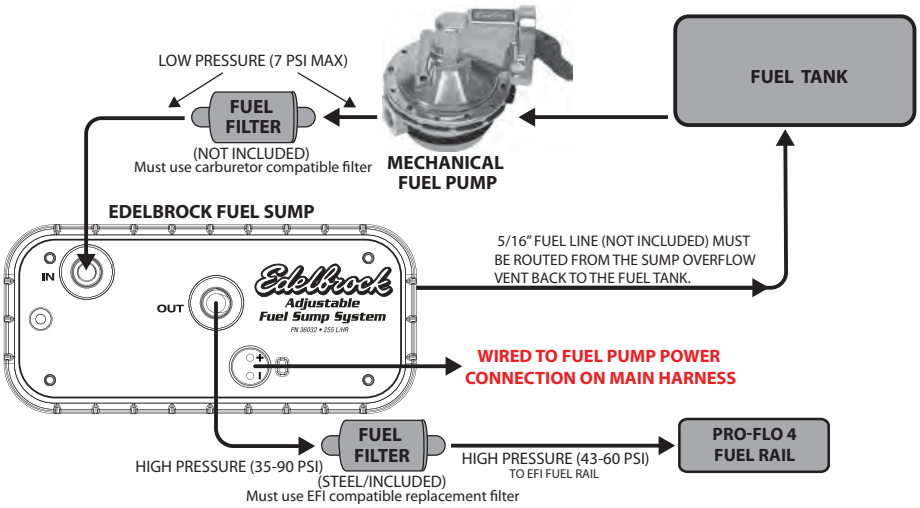


## IN-TANK FUEL PUMPS

The ***Pro-Flo 4*** system controls the fuel pump by switching the pump's ground on and off. The pump's 12v feed is constantly on whenever the system is powered on. Most in-tank fuel pumps have the pump's ground post tied directly to chassis ground. Because of this, in-tank fuel pumps will not function correctly when connected directly to the ***Pro-Flo 4*** wiring harness. If using an in-tank fuel pump with the ***Pro-Flo 4***, a relay must be added to correctly power the fuel pump.

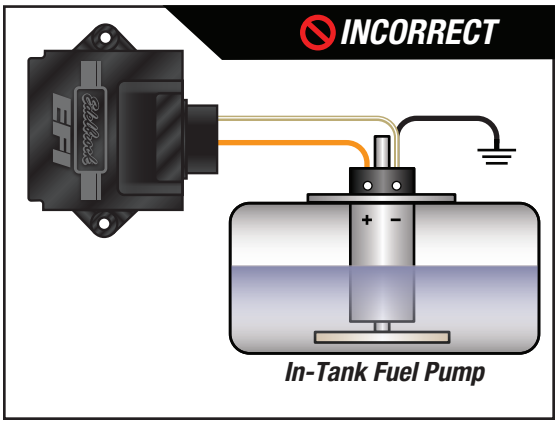


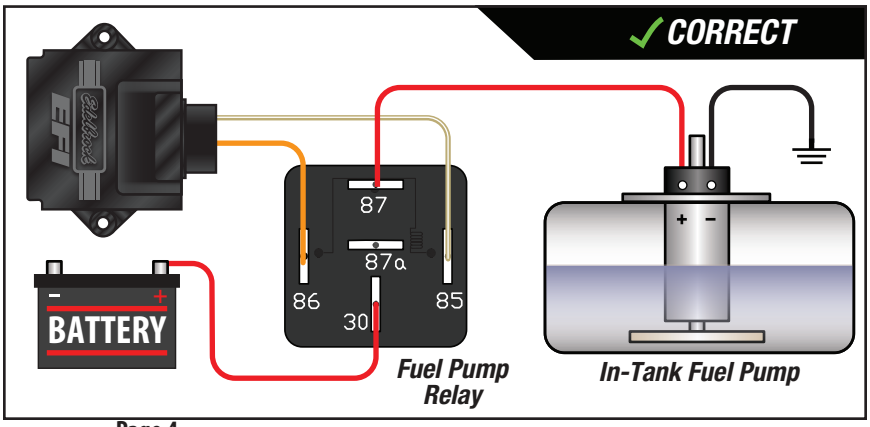

## PRIMARY KIT COMPONENTS (4150)

*(Images are for reference only and may not represent actual components.)*

| Item | P/N | QTY. | Description |
|---|---|---|---|
| 1 | Various | 1 | Pro-Flo 4 Manifold Assembly |
| 2 | 37-3604 | 1 | Oxygen Sensor |
| 3 | 37-1634 | 1 | Coil/IAC Harness |
| 4 | Various | 1 | Pro-Flo 4 Distributor |
| 5 | 37-3909 | 1 | Pro-Flo 4 ECU |
| 6 | 37-1631 | 1 | Injector/Sensor Harness |
| 7 | 37-1630 | 1 | Main Engine Harness |
| 8 | 37-3518 | 1 | Sensor, MAT (shown with grommet) |

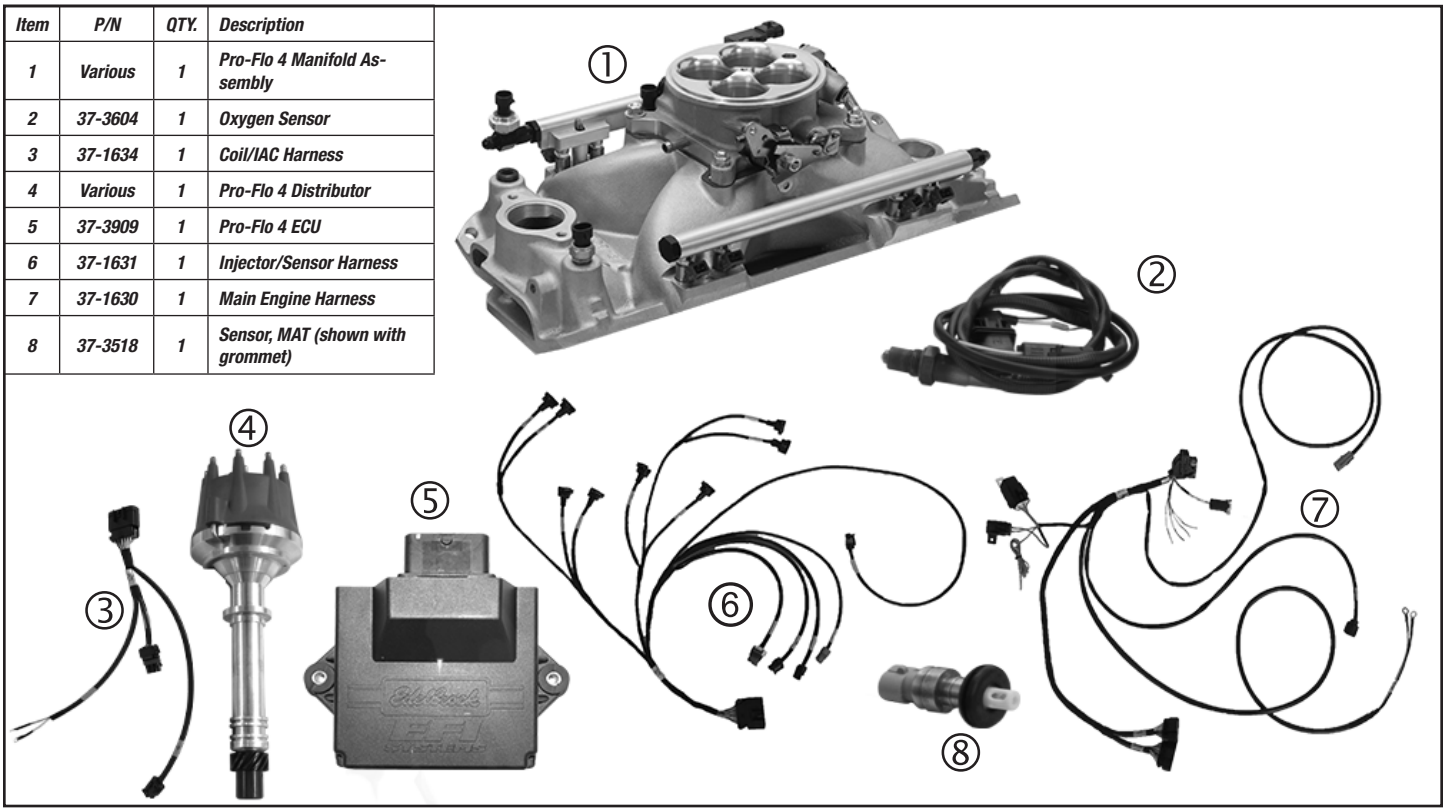


## MAIN HARDWARE (4150)

*(Images are for reference only and may not represent actual components.)*

| Item | P/N | QTY. | Description |
|---|---|---|---|
| 1 | 36-3505 | 2 | Sheet Metal Screw |
| 2 | 38-0590 | 1 | Throttle Return Spring Bracket |
| 3 | 40-3970 | 1 | 1/2" to 3/8" Pipe Reducer |
| 4 | 52-8097 | 1 | Oxygen Sensor Bung Plug |
| 5 | 52-9710 | 1 | Oxygen Sensor Bung |
| 6 | 74-4920 | 1 | Throttle Return Spring |
| 7 | 8016 | 1 | Throttle Linkage Hardware |
| 8 | Various | 2 | Intake Manifold Gasket |
| 9 | 78-2004 | 10 | 11" Tie Wraps |
| 10 | 37-3496 | 1 | Distributor Extension Harness (Ford and some Chrysler Only) Not Pictured |

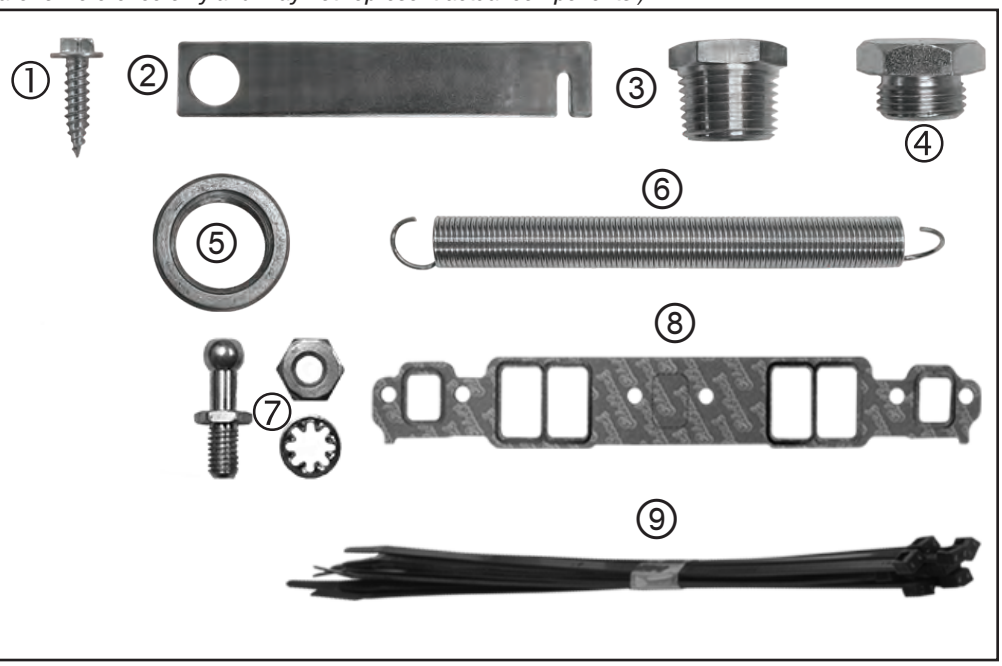

## PRO-FLO 4 4150 STYLE MANIFOLD - COMPONENT LAYOUT

***The Edelbrock Pro-Flo 4 EFI system delivers fuel and air to the engine via an induction system consisting primarily of a 4-barrel throttle body, dual fuel rails, and eight fuel injectors. The induction system is fully assembled, tested, pressure checked, and flowed at the Edelbrock Factory in Torrance, California. Avoid disassembling these components if possible.***

***NOTE**: ALL VACUUM PORTS HAVE FULL-TIME VACUUM. UNUSED PORTS MUST BE CAPPED TO AVOID VACUUM LEAKS.*

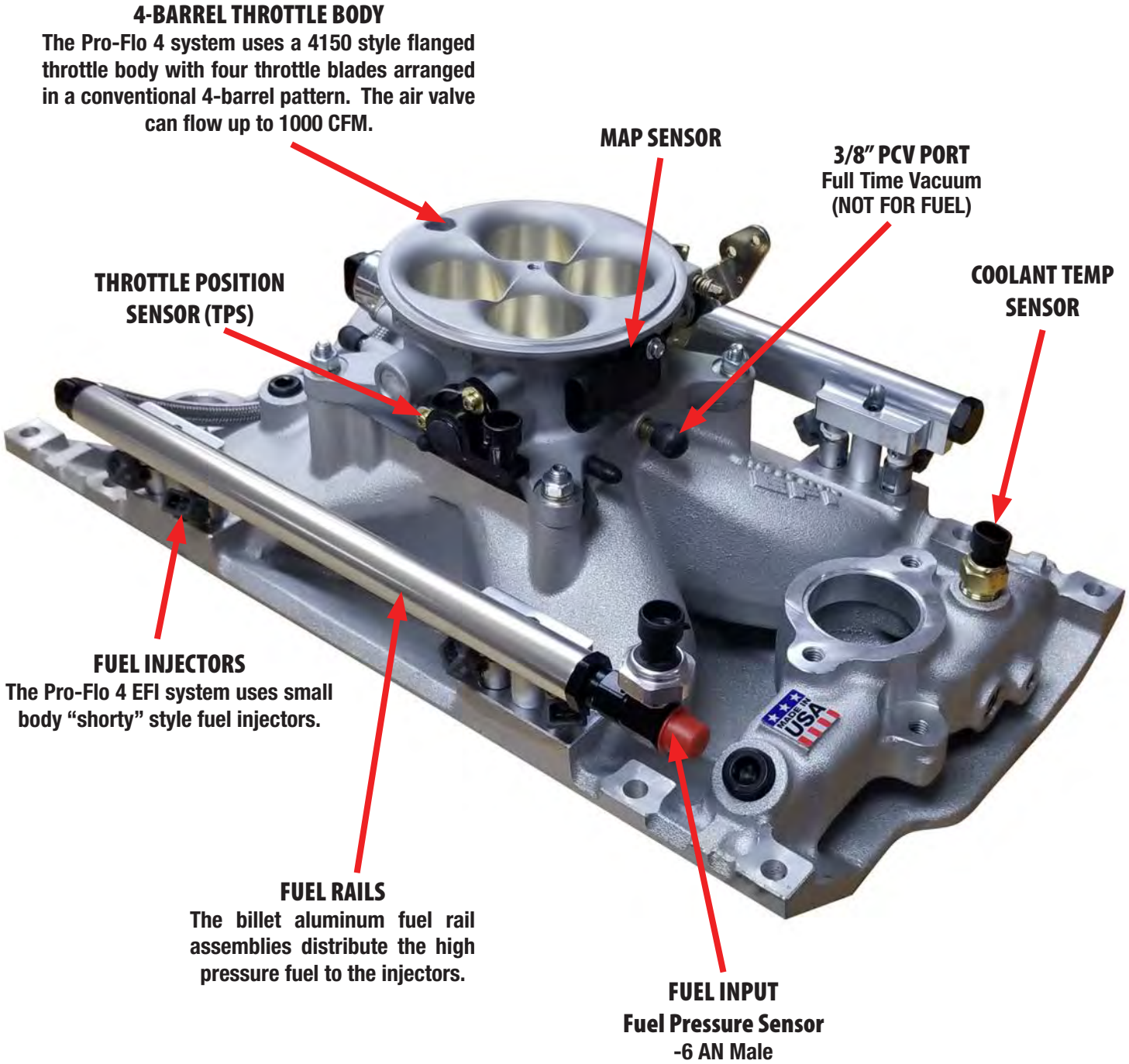


*(Images are for reference only and may not represent actual components.)*

## PRO-FLO 4 4150 STYLE MANIFOLD - COMPONENT LAYOUT

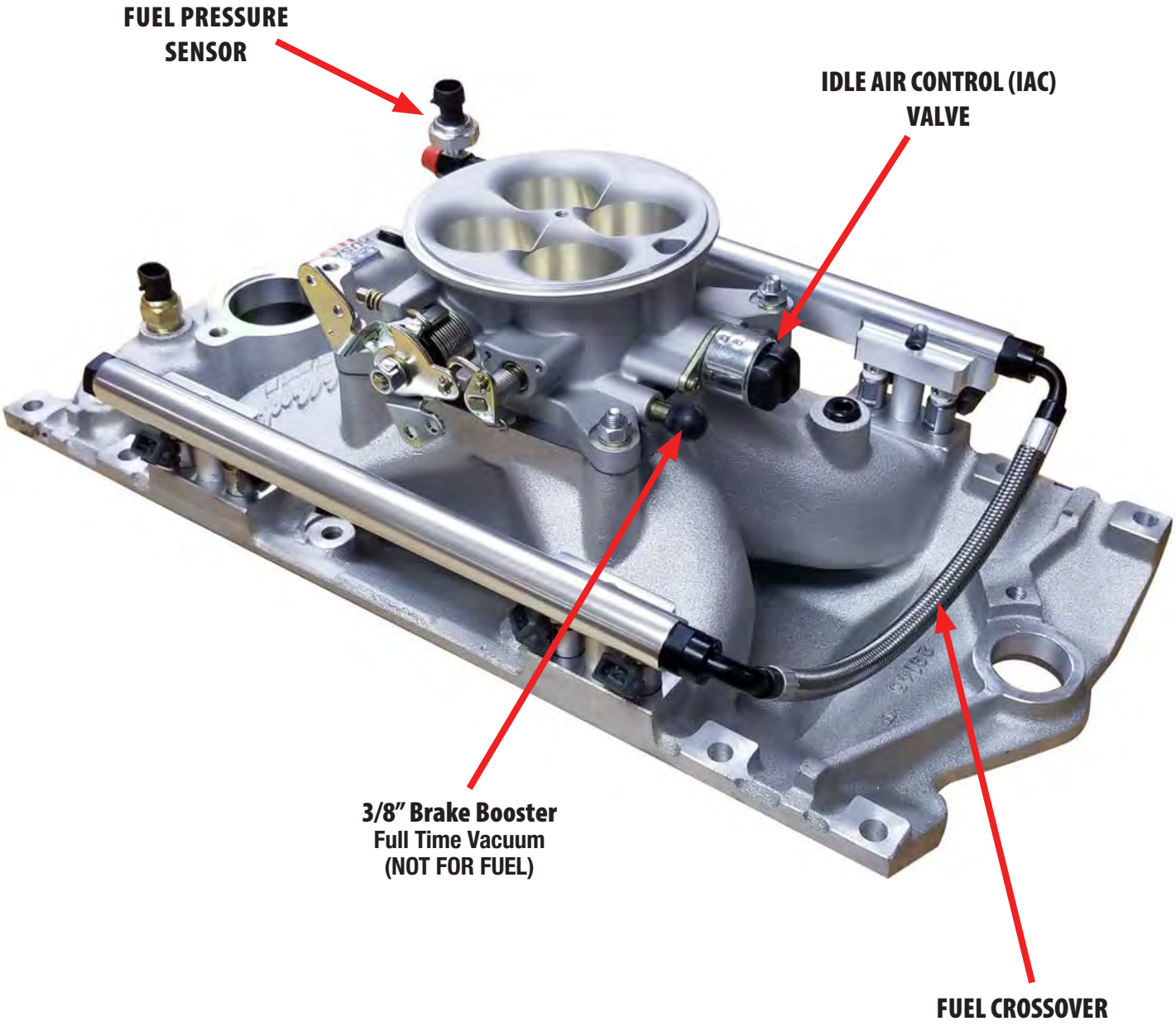


*(Images are for reference only and may not represent actual components.)*

## PRIMARY KIT COMPONENTS (XT)

*(Images are for reference only and may not represent actual components.)*

| Item | P/N | QTY. | Description |
|---|---|---|---|
| 1 | Various | 1 | Pro-Flo 4 Manifold Assembly |
| 2 | 37-3604 | 1 | Oxygen Sensor |
| 3 | 37-1634 | 1 | Coil/IAC Harness |
| 4 | Various | 1 | Pro-Flo 4 Distributor |
| 5 | 37-3909 | 1 | Pro-Flo 4 ECU |
| 6 | 37-1631 | 1 | Injector/Sensor Harness |
| 7 | 37-1630 | 1 | Main Engine Harness |
| 8 | 37-3518 | 1 | Sensor, MAT (shown with grommet) |

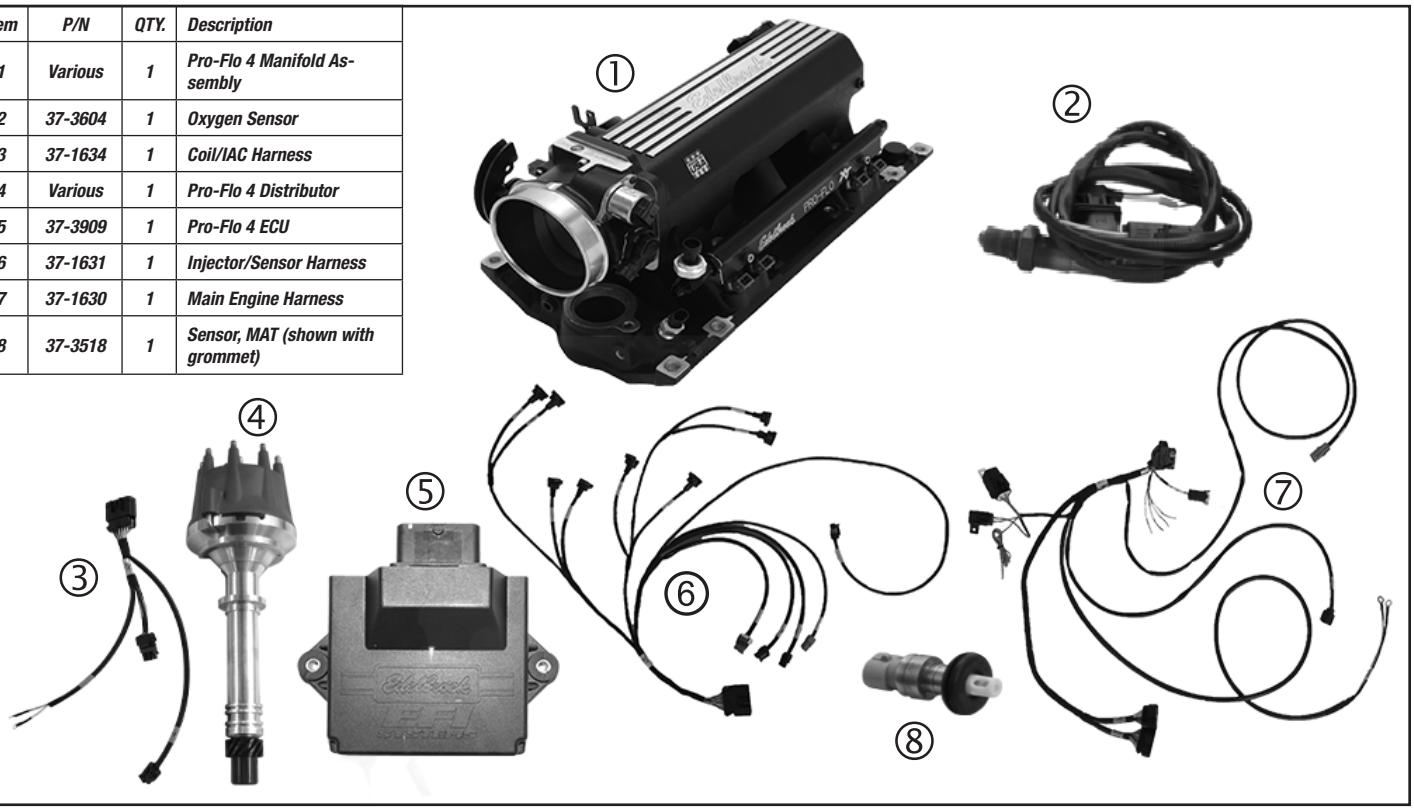


## MAIN HARDWARE (XT)

*(Images are for reference only and may not represent actual components.)*

| Item | P/N | QTY. | Description |
|---|---|---|---|
| 1 | 36-3505 | 2 | Sheet Metal Screw |
| 2 | 40-3970 | 1 | 1/2" to 3/8" Pipe Reducer |
| 3 | 52-8097 | 1 | Oxygen Sensor Bung Plug |
| 4 | 52-9710 | 1 | Oxygen Sensor Bung |
| 5 | 8016 | 1 | Throttle Linkage Hardware |
| 6 | Various | 2 | Intake Manifold Gasket |
| 7 | 78-2004 | 10 | 11" Tie Wraps |
| 8 | 37-1635 | 1 | TPS Extension Harness |
| 9 | 37-1636 | 1 | IAC Extension Harness |
| 10 | 37-3496 | 1 | Distributor Extension Harness (Ford and some Chrysler Only) Not Pictured |

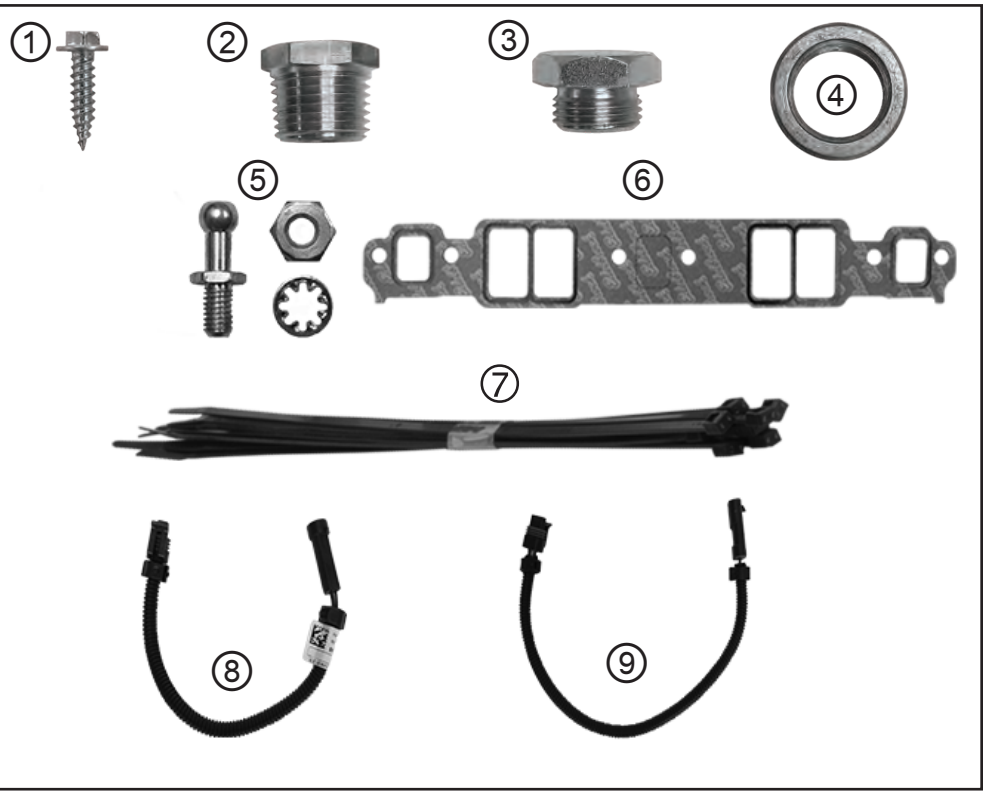

## PRO-FLO 4 XT MANIFOLD - COMPONENT LAYOUT

The Edelbrock Pro-Flo 4 XT EFI system delivers fuel and air to the engine via an induction system consisting primarily of a traditional 90mm throttle body, dual fuel rails, and eight fuel injectors. The induction system is fully assembled, tested, pressure checked, and flowed at the Edelbrock Factory in Torrance, California. Avoid disassembling these components if possible.

**NOTE:** ***Recommended water neck: GM Part Number 10108470***

***NOTE**: ALL VACUUM PORTS HAVE FULL-TIME VACUUM. UNUSED PORTS MUST BE CAPPED TO AVOID VACUUM LEAKS.*

*P/N 357903 SHOWN

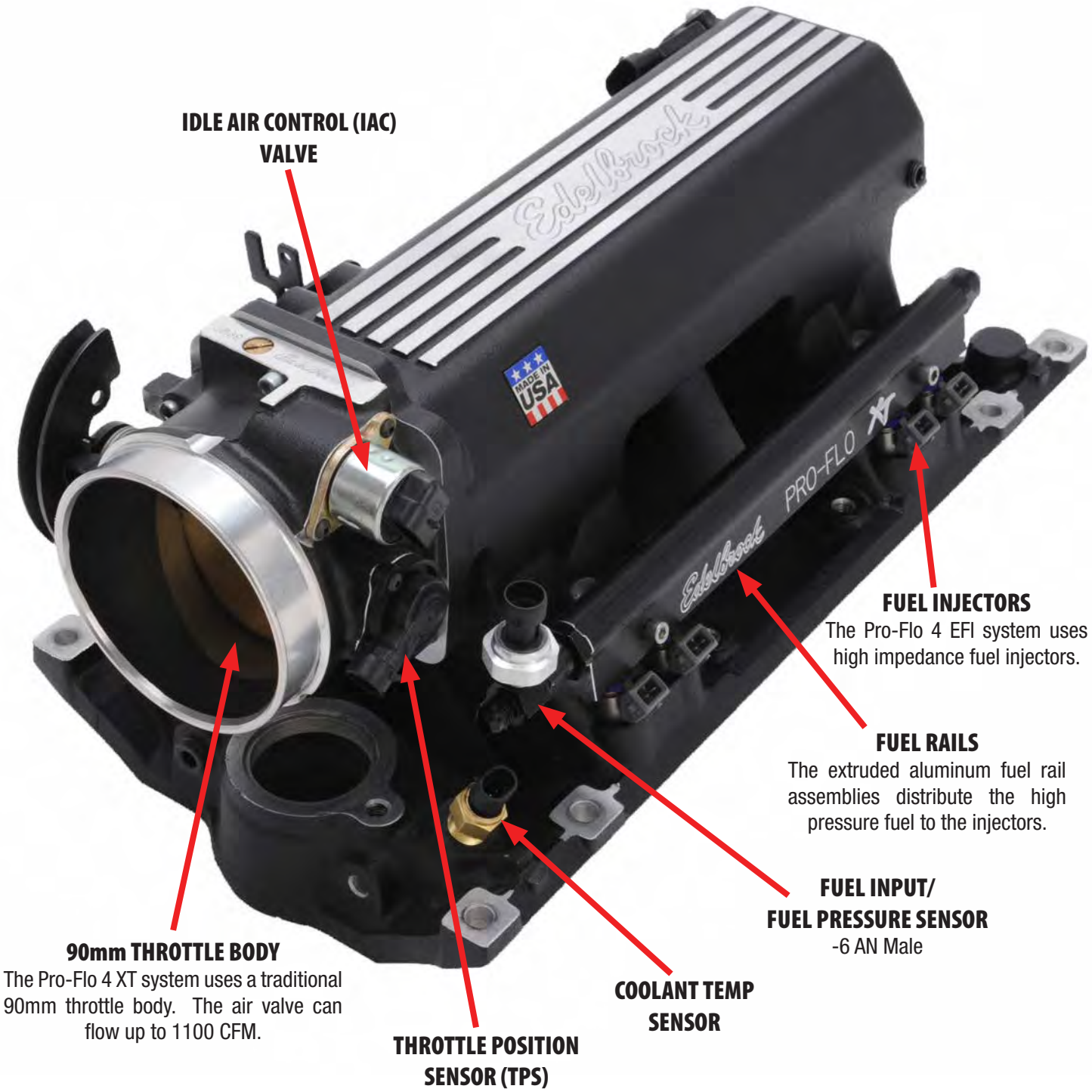


*(Images are for reference only and may not represent actual components.)*

## PRO-FLO 4 XT MANIFOLD - COMPONENT LAYOUT CON'T

*P/N 357903 SHOWN

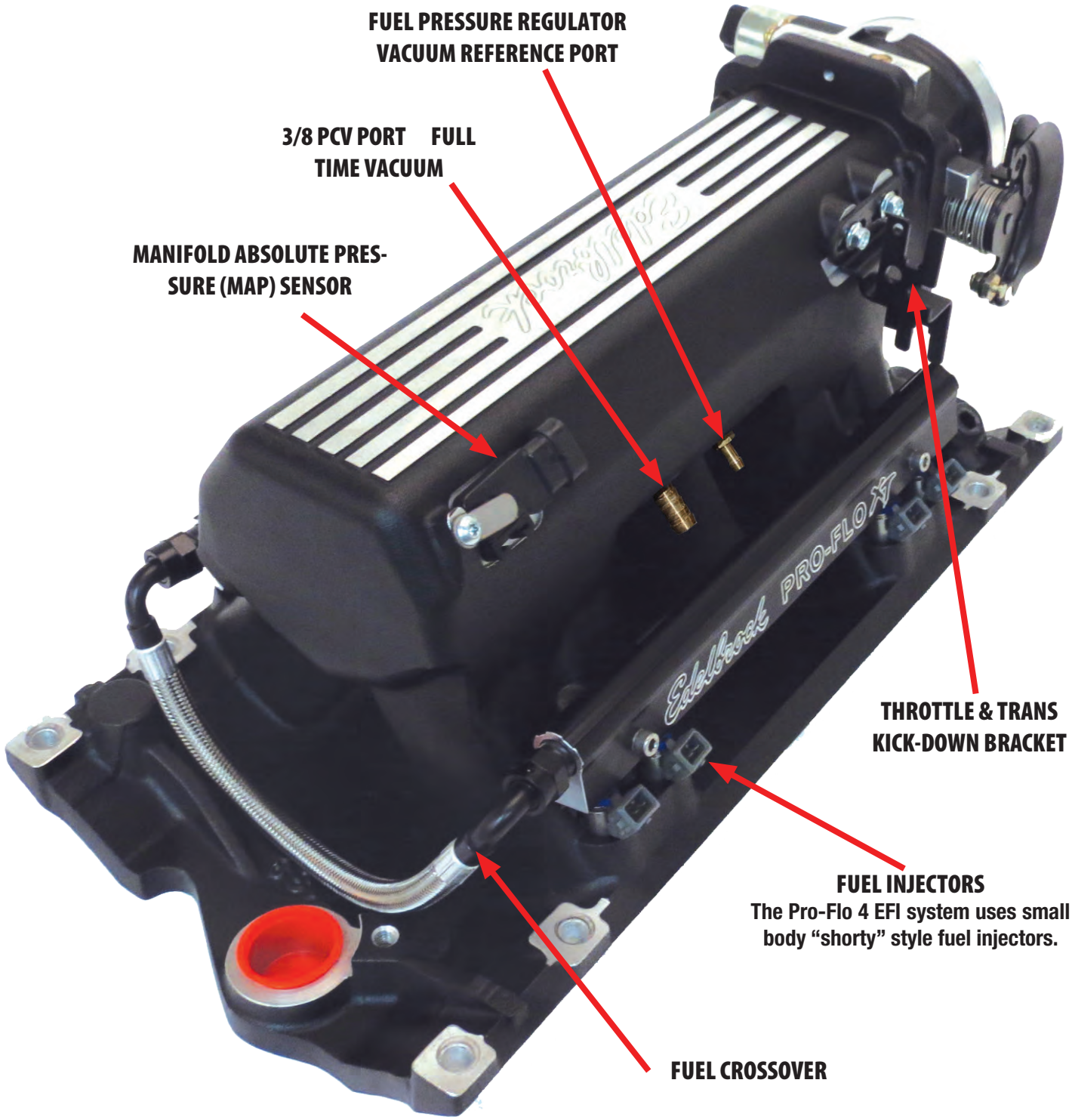


*(Images are for reference only and may not represent actual components.)*

# HARNESS LAYOUT

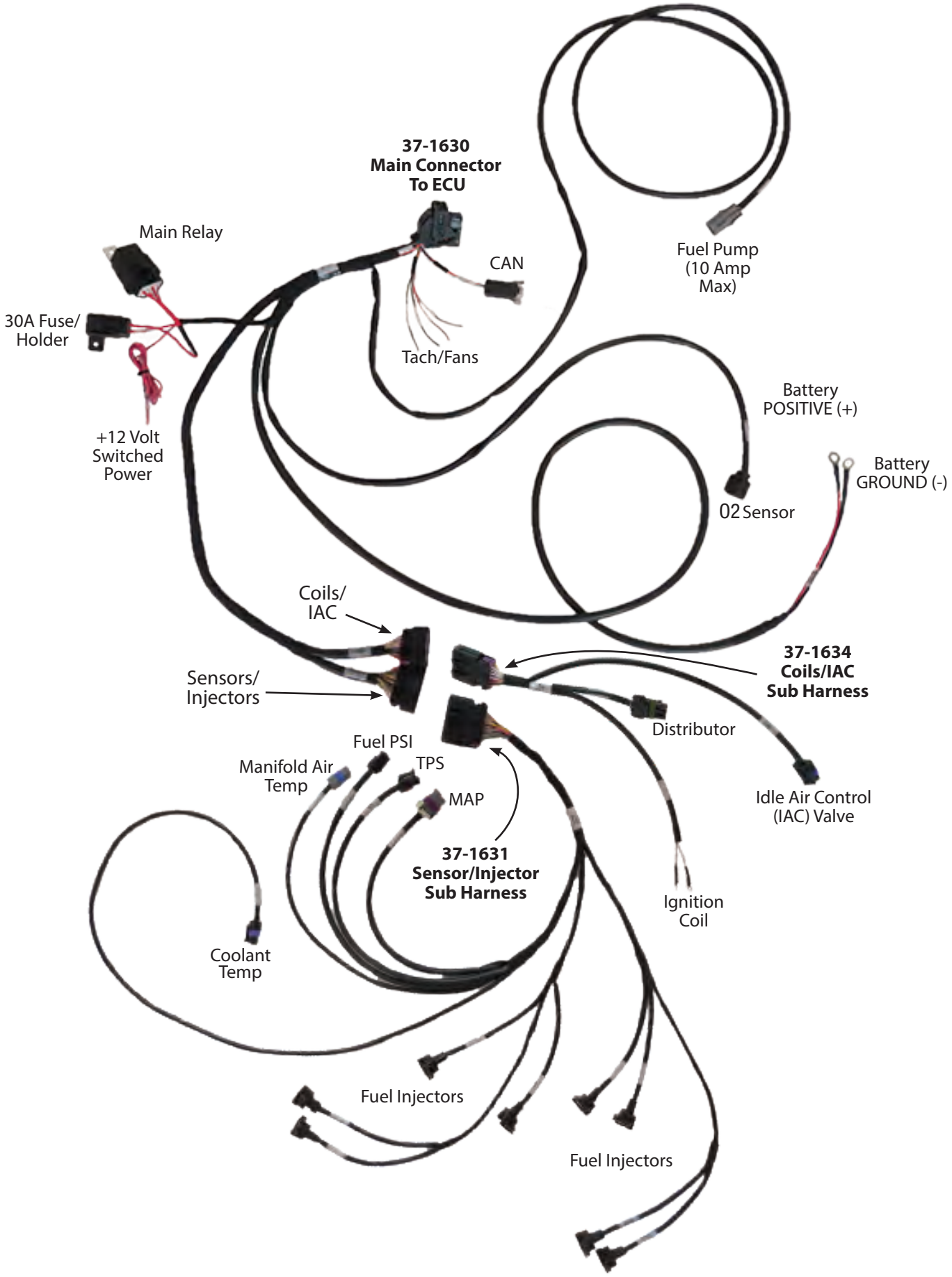

## WIDEBAND OXYGEN (O2) SENSOR INSTALLATION PROCEDURE

The O2 sensor must be installed in the exhaust system using the supplied O2 sensor bung from the hardware bag. The O2 sensor is required as it measures the oxygen content of the exhaust gas, which is used by the ECU to manage fuel delivery under closed loop control.

**NOTE:** It is suggested that the O2 sensor bung be installed by a professional muffler shop prior to the installation of the Edelbrock ***Pro-Flo 4*** EFI system. DO NOT drive the vehicle with the O2 sensor unplugged as this will damage the O2 sensor. An O2 sensor bung plug is provided for your convenience.

Because of harness length constraints, it is highly recommended to install the O2 sensor and the ***Pro-Flo 4*** ECU on the same side of the vehicle.

**WARNING:** A properly sealed exhaust system is critical for the ***Pro-Flo 4*** EFI to function properly. Any air leaks in the exhaust system, upstream of the O2 sensor, will skew the O2 sensor's output resulting in improper calibration which can lead to engine damage. Improper installation of the O2 sensor and any damage that may result is not covered by any Edelbrock Warranty.

1. Verify that the header and tailpipe gaskets and flanges are in good condition. It is recommended to replace any damaged gaskets and flanges as they may cause exhaust leaks, which can lead to inaccurate Air Fuel Ratio (AFR) readings. Torque all fasteners to manufacturer's specifications to avoid any possible exhaust leaks.

   **WARNING:** The exhaust system must be completely sealed from cylinder head to tailpipe. This is the number one cause of poor performance as exhaust leaks affect the air/fuel mixture seen by the ECU. Use locking type hardware to secure exhaust headers to cylinder heads and exhaust collector to mid-pipe. DO NOT USE NYLOC NUTS. Retorque exhaust hardware on a regular basis to ensure exhaust leaks do not occur. Be sure any RTV Silicone used to seal the exhaust system is compatible with Oxygen Sensors. This information will be found on the silicone tube packaging.

   The O2 sensor bung must be installed in the exhaust system as close to the engine as possible, after the header collector and before the catalytic converter (if equipped). This location must be approximately 10° above horizontal and within reach of the O2 sensor harness connector on the ***Pro-Flo 4*** main harness. **NOTE:** There must be at lease 24" of exhaust pipe after the O2 sensor. Open headers or "zoomies" will cause the sensor to read incorrectly.

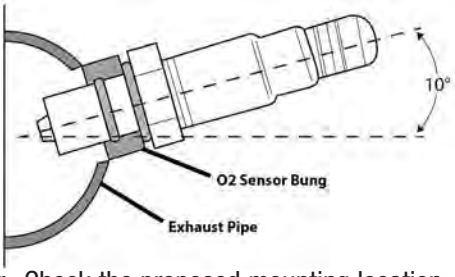


2. Mark the drilling location on the exhaust system pipe with a permanent or paint marker. Check the proposed mounting location to ensure the clearance for the O2 sensor is adequate and that the O2 sensor connector on the main harness will reach the O2 sensor location. Make sure to take engine movement into consideration when checking for clearance.

3. Drill a 5/8" hole at your mounting location. Deburr and clean the hole as needed.

4. Fit the provided bung onto the hole opening. Secure the bung with a clamp and weld the bung into place.

5. Once the installation of the bung is complete, make sure to clean the threads of the fitting to ensure it's free of debris.

   **NOTE:** The O2 sensor bung uses an M18 x 1.5 thread pitch.

6. If you are ready to install the ***Pro-Flo 4*** EFI system, proceed to Step #9 to install your O2 sensor. Otherwise, if your ***Pro-Flo 4*** EFI System will be installed at a later time, temporarily install the O2 sensor bung plug supplied in the hardware bag. You MUST apply a high-heat anti-seize compound (not included) to the threads of the O2 sensor bung plug and install into the bung using an 7/8" oxygen sensor socket or 7/8" wrench. This will allow you to drive the vehicle until the O2 sensor is installed.

7. When you are ready to begin installation of the ***Pro-Flo 4*** EFI system, remove the O2 sensor bung plug.

8. Apply a high-heat anti-seize compound (not included) to the threads of the O2 sensor and install into the bung using an 7/8" oxygen sensor socket or 7/8" wrench.
   **NOTE:** Avoid contacting tip of O2 Sensor with any anti seize compound, damage may occur.

9. Connect the O2 sensor to the O2 sensor connector on the main ***Pro-Flo 4*** ECU harness.

## DETERMINING HOOD CLEARANCE

1. Prior to installing the ***Pro-Flo 4*** EFI system, it is highly recommended to verify that you will have enough hood clearance.
2. Using modeling clay or putty, not included, make five small cones about 2-3 inches high.
3. Position the cones on the air cleaner at front, rear, each side, and on the center stud.
4. Close the hood to locked position and re-open.
5. The height of the cones indicate the amount of clearance between the hood and the air cleaner. Record these measurements.

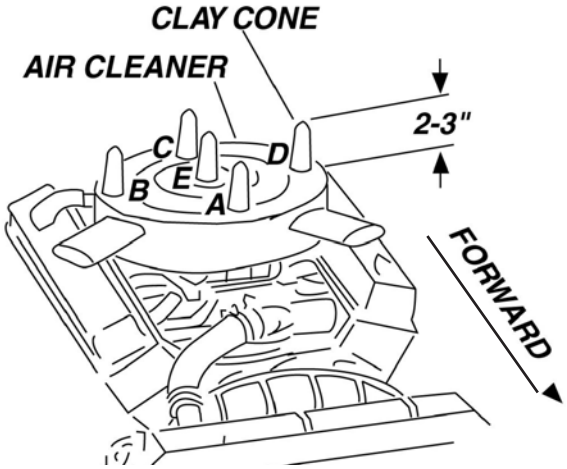


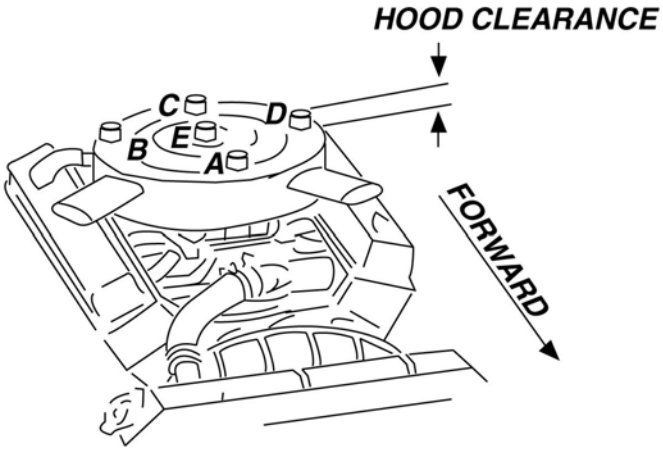


### MANIFOLD & CARBURETOR HEIGHT VS. PRO-FLO 4 HEIGHT

1. Remove the factory air cleaner.
2. Lay a straightedge, such as a yardstick, across the top of the carburetor from front to back.
3. Measure from the base of the manifold end seal surfaces to the straightedge.
4. Record these measurements (height A and height B).
5. Add height A and height B and divide by two to get the average height. Ex: (A+B) / 2
6. Measure the ***Pro-Flo 4*** system from the base of the manifold to the top of the throttle body or the highest point of the manifold (XT models).
7. Compare the two measurements. If the ***Pro-Flo 4*** unit is taller, subtract the difference from the hood clearance figure to determine the new hood clearance.

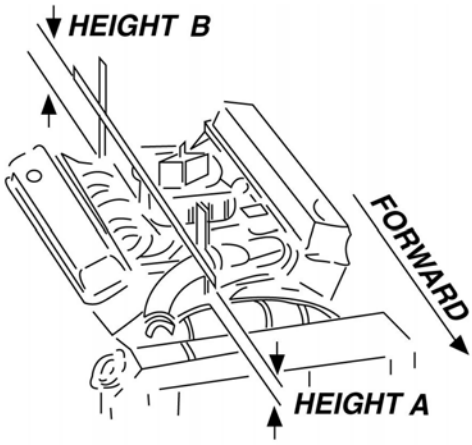


***CAUTION:*** *Because of engine torque, it is recommended to maintain at least 1/2-inch of clearance between the hood and air cleaner. If hood clearance is insufficient, a low profile air cleaner may solve the problem.*

## PRO-FLO 4 EFI INSTALLATION

**TIP:** Due to the many different types of cylinder head and valve cover designs, it is highly recommend that the Pro-Flo 4 intake manifold be "dry fitted" without gaskets or sealant to check for proper fitment before final installation. Check for adequate clearance around the fuel injector bosses and valve cover mounting rails on cylinder heads as well as clearance with valve covers themselves. Minor sanding or grinding may be required.

**NOTE:** Though visually different, the installation procedure is relatively the same between manifolds using 4150 style throttle bodies and XT type throttle bodies.

1. Disconnect the battery. Drain the radiator coolant (radiator drain plug is typically located on lower right facing engine).
   **WARNING! Do NOT drain coolant while engine is HOT!**

2. Remove the gas cap to release any fuel pressure present in the system. Remove the air cleaner, throttle linkage, vacuum and fuel line from the carburetor. Remove all brackets and the radiator hose (if applicable) from the intake manifold. TIP: Tag all linkages, vacuum and fuel lines. This will simplify the installation.

3. Rotate the engine to 12° Before Top Dead Center (BTDC) on the compression stroke of cylinder #1.

4. Remove the distributor hold down clamp and remove the distributor from the engine.

5. Clean all debris from the intake manifold and unbolt the carburetor and intake manifold.
   **NOTE:** Removal of the valve covers may be required on some applications. If valve covers are removed, replace the valve cover gaskets as needed.

6. Place rags or paper towels into the cylinder head ports and lifter valley to prevent debris from falling into the ports and combustion chambers.

7. Remove the gaskets and gasket residue using a metal scraper. Vacuum up any debris before proceeding.

8. Remove the rags or paper towels from the cylinder head ports. Using a shop rag and degreaser, clean the head/manifold mating surface.

9. Apply two (2) thin layers of Gasgacinch to the head/manifold mating surface (Figure 1) and one (1) side of the supplied intake manifold gaskets (Figure 2). Let the Gasgacinch tack up for about one (1) minute.

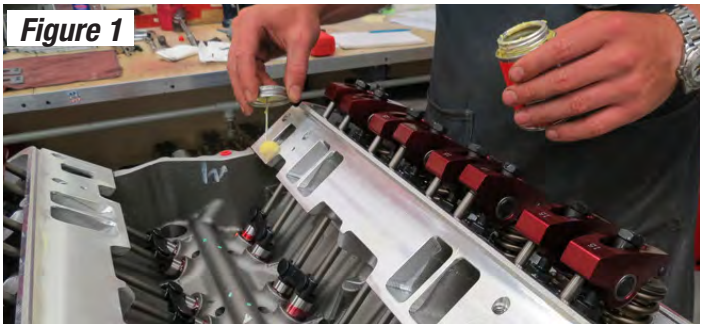
Figure 1

Figure 2

10. Position the intake manifold gaskets (side with Gasgacinch) onto the cylinder heads making sure to align the intake ports. Press down firmly to secure (Figure 3).

11. Using finger, apply a thin layer of gasket maker around the intake ports and a slightly thicker layer around the water jackets (Figure 4). Do this for both intake manifold gaskets.

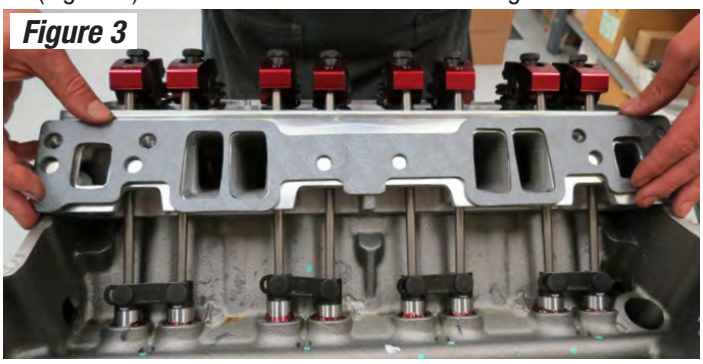
Figure 3

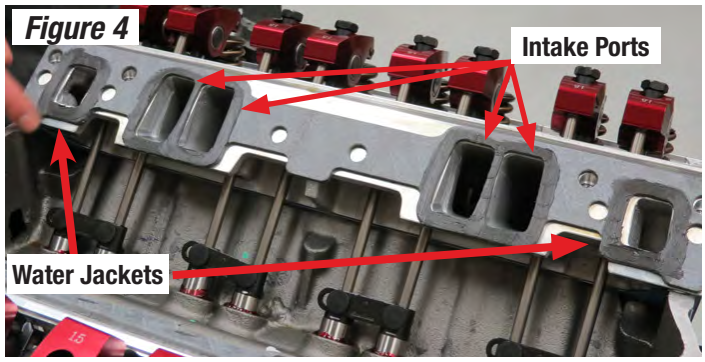

Figure 4

12. Apply a bead of gasket maker about a 1/4” thick to the front and rear of the block as shown (Figure 5).

13. Wipe down the intake manifold’s mating surface with degreaser (Figure 6). Carefully position the intake manifold onto the cylinder heads.

14. Torque all manifold bolts in a crisscross pattern starting with the inner bolts and working outwards. Refer to the vehicle’s service manual for proper torque spec and procedures.
**NOTE:** On most applications, removal of fuel rails prior to installing the manifold assembly is not required.

15. Reinstall the valve covers if removed. Attach the throttle linkage and verify it moves freely without interference. Any throttle linkage interference MUST be resolved before proceeding.

16. Verify the engine is still positioned at 12 degrees before top dead center with cylinder #1 on a compression stroke.

17. Install the gasket onto the distributor housing and apply a liberal amount of lubricant to the distributor gear.
**NOTE:** Disregard distributor housing O-rings on Chevrolet applications.

18. Install the Edelbrock Pro-Flo distributor so that the rotor is pointed in the proximity of the #1 stamped on the outside of the distributor housing and the short trigger tooth is just entering the distributor sensor.
**NOTE:** You may need to remove and reinsert the distributor a few times to get the alignment correct. Make sure that the distributor seats down completely and has full engagement with the oil pump drive. You may need to rotate the oil pump shaft to ensure it is engaged properly.

19. Tighten the hold down clamp leaving it just loose enough that you can rotate the distributor during the timing procedure. The final timing will be set using the **E-Tuner 4** Android app.

**DISTRIBUTOR ROTOR LOCATION AT INSTALLATION POINTING TO #1 ON SIDE OF HOUSING WITH ENGINE AT 12° BTDC CYLINDER #1 ON COMPRESSION STROKE.**

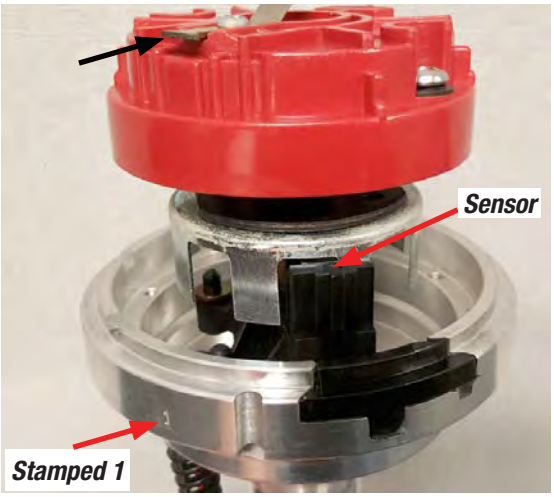


20. Install the spark plug wires. Position cylinder 1 spark plug wire on the distributor cap post located at the 1 stamped on the distributor housing.

21. Find a suitable mounting location for the ECU. This should be on the same side of the vehicle as the O2 sensor. Recommended mounting locations are the fender well, inner fender panel or inside the vehicle on the passenger side kick panel. Be sure the O2 sensor connection reaches the main harness connector.
**NOTE:** It is recommended to mount the ECU in a location away from excessive heat, vibration, possible water exposure and as far away from spark plug wires, and ignition related components as possible.

22. Using the supplied sheet metal screws from hardware bag, mount the ECU to the desired mounting location.

23. Connect the ***Pro-Flo 4*** main harness to the ECU. Find a suitable harness route in the engine compartment for the main harness from the ECU to the harness connections at the rear of the engine. **TIP:** For most installations, the harness fits best if routed from the rear of the engine back towards the firewall, across the firewall, then forward towards the ECU location
**NOTE:** Avoid routing the harness near any ignition related components (ignition coil, distributor, spark plug wires). Also avoid routing near the headers, sharp edges, or any tight radius corners that may damage the harness

24. Route the power and ground leads on the main harness towards the battery. Connect the RED POWER lead (+12 Volt) and the BLACK GROUND (-) lead to the appropriate battery terminals. If necessary, the power and ground leads may be extended to reach the battery. However, the use of 12 gauge wire or larger is required.
**WARNING:** All power and ground leads must connect directly to the battery. **DO NOT RUN POWER TO THE STARTER OR GROUND TO ENGINE BLOCK OR CHASSIS!**

    Securely mount the Fuse Holder and the Main Relay in an accessible location.

25. Connect the Pink/Black IGN switched wire on the main harness to a +12 Volt switched power source that provides +12 Volts when the key is both “ON” and “CRANKING”.
**NOTE:** It is critical that the switched +12 Volts to the IGN switch wire is constant during cranking. This is a common issue on vehicles with no start or hard to start issues. Do not connect this to the positive side of the coil.

26. Secure the harness and leads with tie wraps from the hardware bag. Avoid over tensioning wire ties as this may damage the harness.

27. If not already completed, remove the previously installed O2 sensor bung plug from the bung in the exhaust system and install the O2 sensor into the bung using an 7/8” oxygen sensor socket or 7/8” wrench. Connect the main harness lead labeled "O2 Sensor" to the O2 sensor connector. Secure the O2 sensor lead as to avoiding contact with the exhaust pipes. Make sure to leave plenty of air space between the harness and the exhaust manifolds/headers. A 12” extension is available from www.bmotorsports.com #CONN-85773

28. Connect the 37-1631 sub harness to the main harness connector labeled SENSORS/INJECTORS. Route the harness around the intake manifold and make the following connections:

- MAP - Manifold Absolute Pressure (MAP) sensor is either mounted directly to throttle body or on a bracket with a hose.
- TPS - Throttle Position Sensor (TPS) is mounted directly to throttle body inline with the throttle blade shaft.
- FUEL PSI - The fuel pressure sensor fitting is assembled to the fuel inlet fitting on fuel rail. The fuel inlet may be on left or right fuel rail. Locate the fuel pressure inlet fitting as necessary for the most convenient fuel supply hose routing on your application.
- AIR T - Mount the air temperature sensor in the air cleaner base. Drill the air cleaner base with a ¾ drill and deburr any sharp edges. Install the air temperature sensor grommet in the base, then slide sensor into grommet. Connect the main harness air temp connector to the sensor.
- COOL T - Coolant Temp Sensor is typically pre-installed in intake manifold in water crossover passage.

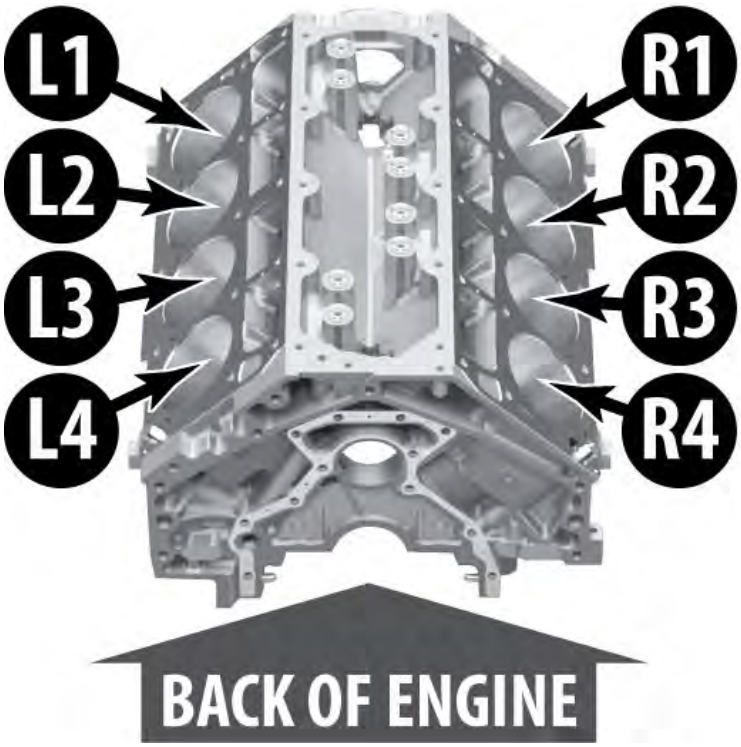


- INJECTORS - Injector connectors are marked L1-L4 and R1-R4. The L connectors go on the left side of the engine and the R connectors on the right side of the engine. Order of injectors 1-4 is from front of engine to rear of engine. See image above.

29. Connect the 37-1634 sub harness into the main harness connector labeled COILS/IAC. Connect the IAC connector to the IAC motor located on the throttle body.

**30. DISTRIBUTOR CONNECTION** - Connect the 3-pin connector on the distributor to the ***Pro-Flo 4*** #37-1634 Coil/IAC sub harness connector labeled DISTRIBUTOR. Ford and some Chrysler applications with distributor located at front of engine will use the provided distributor extension harness.

**COIL CONNECTION WITHOUT CDI BOX** - The coil can be directly fired without the use of a CDI box. Use the supplied sub harness #37-1634 to attach the coil directly. The Orange wire goes to the positive (+) terminal and the White wire goes to the negative (-) terminal. Connect the #37-1634 ignition coil harness to the #37-1630 main harness.

**COIL CONNECTION WITH CDI BOX** - Cut off the eye terminal on the white/negative coil wire of the #37-1634 sub harness and terminate it to the WHITE trigger signal wire on the CDI box. Cut off the eye terminal on the orange coil positive wire of the #37-1634 sub harness and terminate it to the smaller RED key on power of the CDI Box. Connect the Battery power and ground wires for the CDI Box and the Hi Voltage Coil Wires from CDI box to Coil (refer to the diagram on Page 18). Connect the 37-1634 ignition coil harness to the 37-1630 main engine harness.

31. Due to the universal nature of the ***Pro-Flo 4*** EFI system, it's impossible to preset the throttle blades to best fit all the different possible idle characteristics of engine and cam size combination. To help the engine idle during initial startup, it is recommended to adjust the throttle screw as needed to keep the engine from stalling.

- Street/Stock Cam (210° or Less): Turn (clockwise) the throttle screw 1/2 turn from the current factory setting.
- Mild Cam (210° or 230°): Turn (clockwise) the throttle screw 1 turn from the current factory setting.
- Race Cam (230° or Greater): Turn (clockwise) the throttle screw 1.5 turns from the current factory setting.

32. Install the throttle return spring and bracket from hardware bag. Manifold bolt locations are ideal mounting points.

33. INSTALL THE FUEL DELIVERY SYSTEM. Use the provided 2 pin male Weather Pack connector and terminals to build a plug-in fuel pump power/ground connection with the fuel pump power lead in the main wiring harness labeled "Fuel Pump". Maximum fuel pump current must be less than 10 Amps if powering the pump directly from the ECU. If using a fuel pump that draws more than 10 Amps during normal operation, a relay must be used – see fuel pump wiring diagrams below. When the ignition switch is first turned on, the ECU will run the fuel pump for 8 seconds to prime the fuel system and then shut off. The fuel pump will be turned on anytime an RPM signal is detected by the ECU. Refer to your fuel system's installation instructions then return to this manual and continue to the next step.

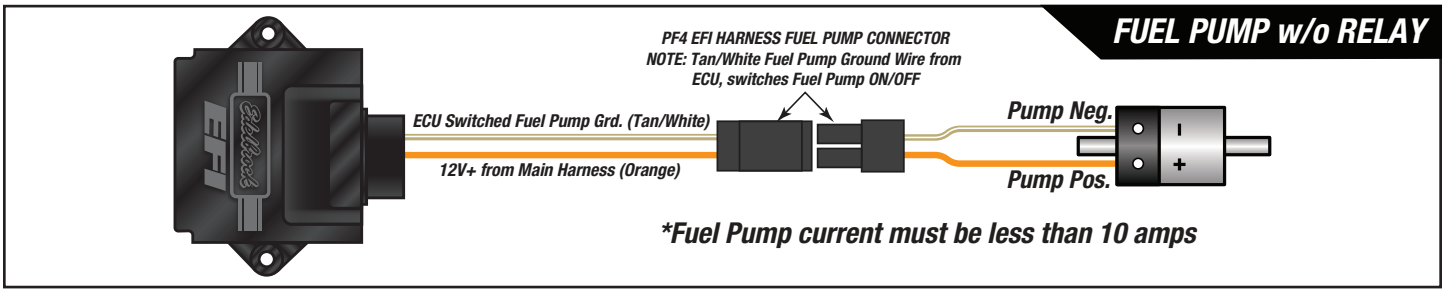


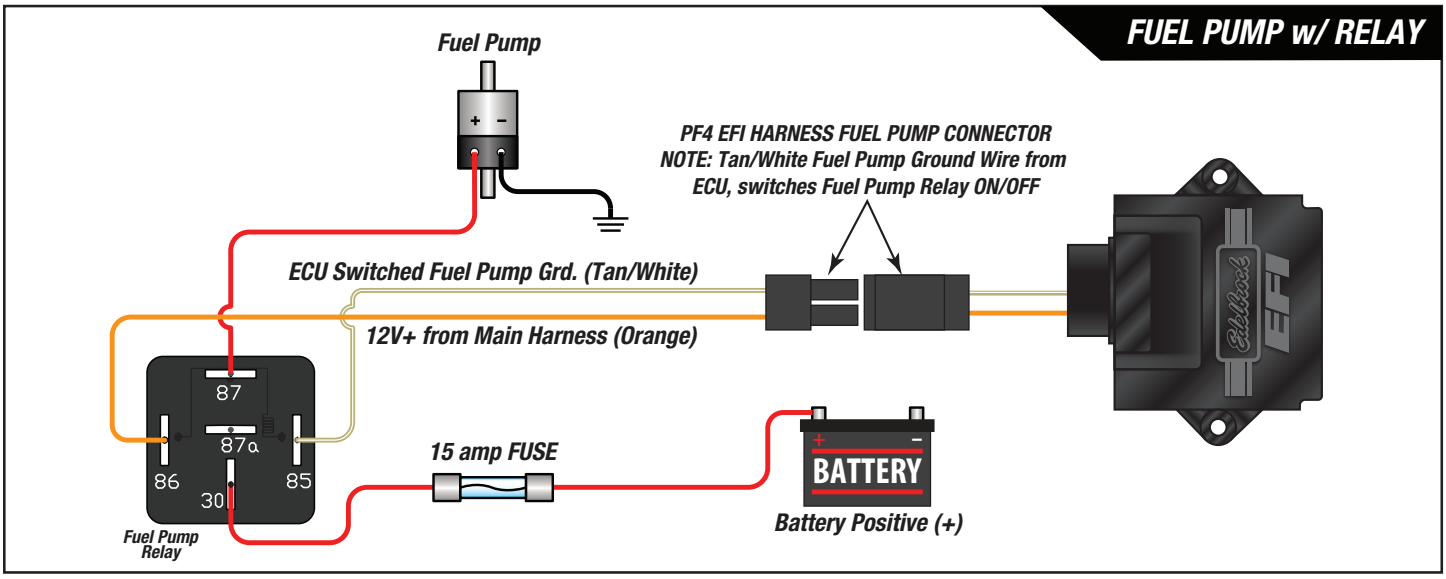

34. Once the ***Pro-Flo 4*** EFI System and the fuel delivery system have been installed, continue to the Quick Start Guide and E-Tuner User's Manual to use the **E-Tuner 4** Setup Wizard to complete your installation. The **E-Tuner 4** Setup Wizard for ***Pro-Flo 4*** EFI systems includes calibrations for most popular engine configurations and power levels. It is important that you choose the proper calibration that is closest to your engine/EFI system configuration. The most important details include engine displacement, maximum HP, injector size, fuel pressure (43 or 58 psi), camshaft specification, expected engine vacuum at idle. For further information regarding these details and suggested fuel pressure for your application please refer to the ***Pro-Flo 4*** EFI Setup Wizard Matrix at the back of these instructions.
    **NOTE:** Some application specific calibrations are pre-loaded into the **E-Tuner 4** app and must be directly loaded onto the ECU. These files are accessible in the tablet app by going to ECU Settings>Load Map>Other Cals.

35. If supplying your own Android device, refer to the E-Tuner User's Manual for further information.

## FAN & TACHOMETER OUTPUTS

The main harness has three flying leads near the ECU connector: two outputs for triggering electric fan relays and one output for tachometer signal. All three outputs are GROUND outputs that are rated to 1.0 Amp. Do NOT connect ECU fan outputs directly to electric fans. Fan outputs can only be used to trigger relays – see fan diagrams on the next page. Use only Bosch type automotive relays. Do not use heavy duty relays – see relay selection below.

Tach signal output is 12v square wave. Many old style tachometers require a coil primary signal and may not work with a square wave signal. If tach does not work, try moving tach signal to coil negative post.

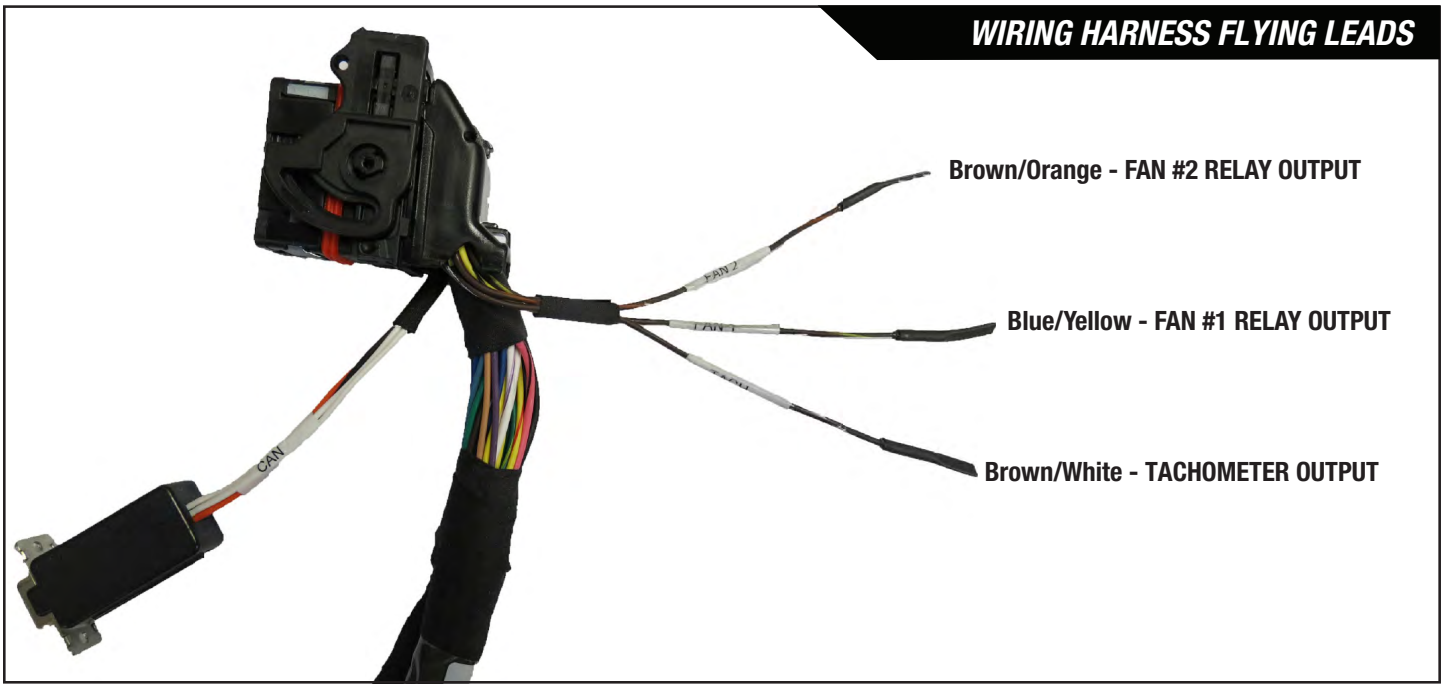


## RELAY SELECTION

Be sure to use Bosch style 12v relays. Do not use "heavy duty" style relays or solenoids. Doing so could damage the ECU.

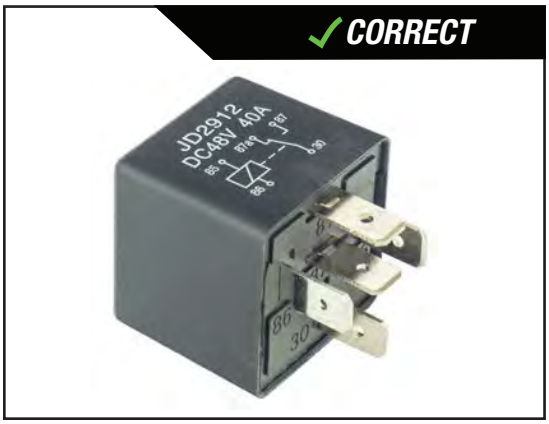


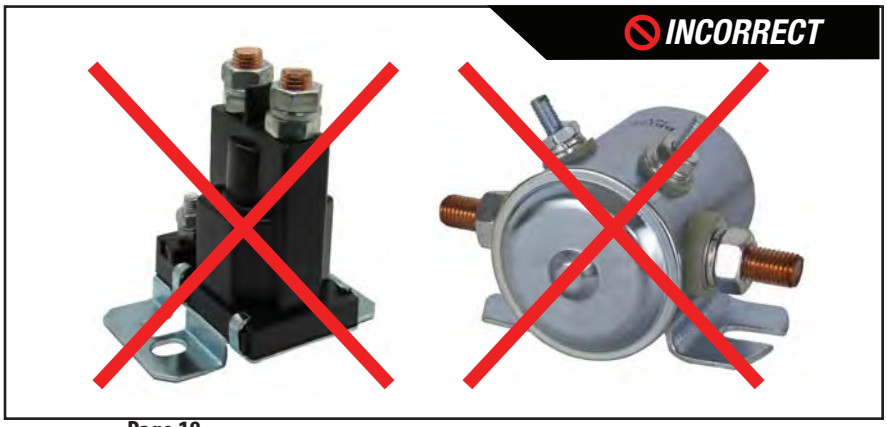

# FAN & TACHOMETER DIAGRAMS

## FAN #1 DIAGRAM

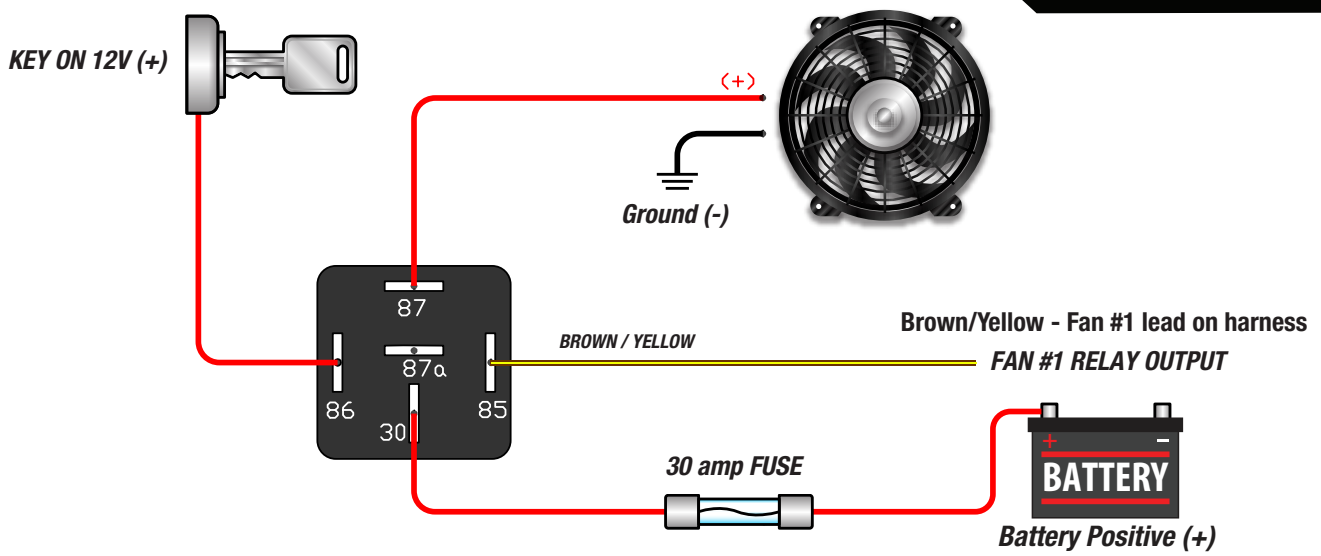


## FAN #2 DIAGRAM

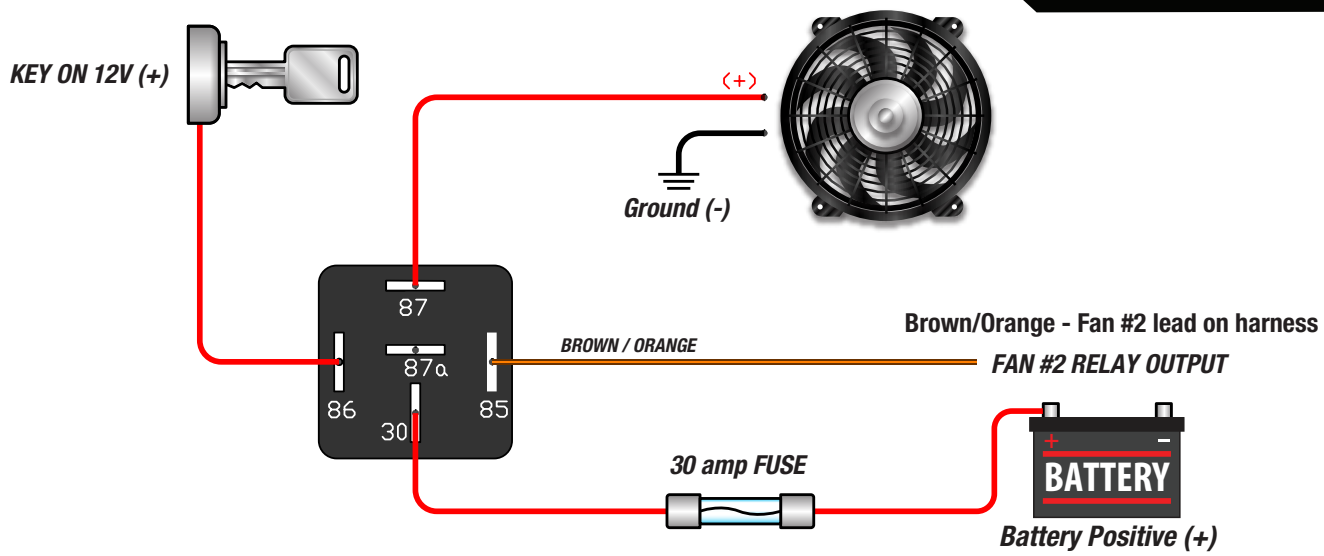


## TACHOMETER

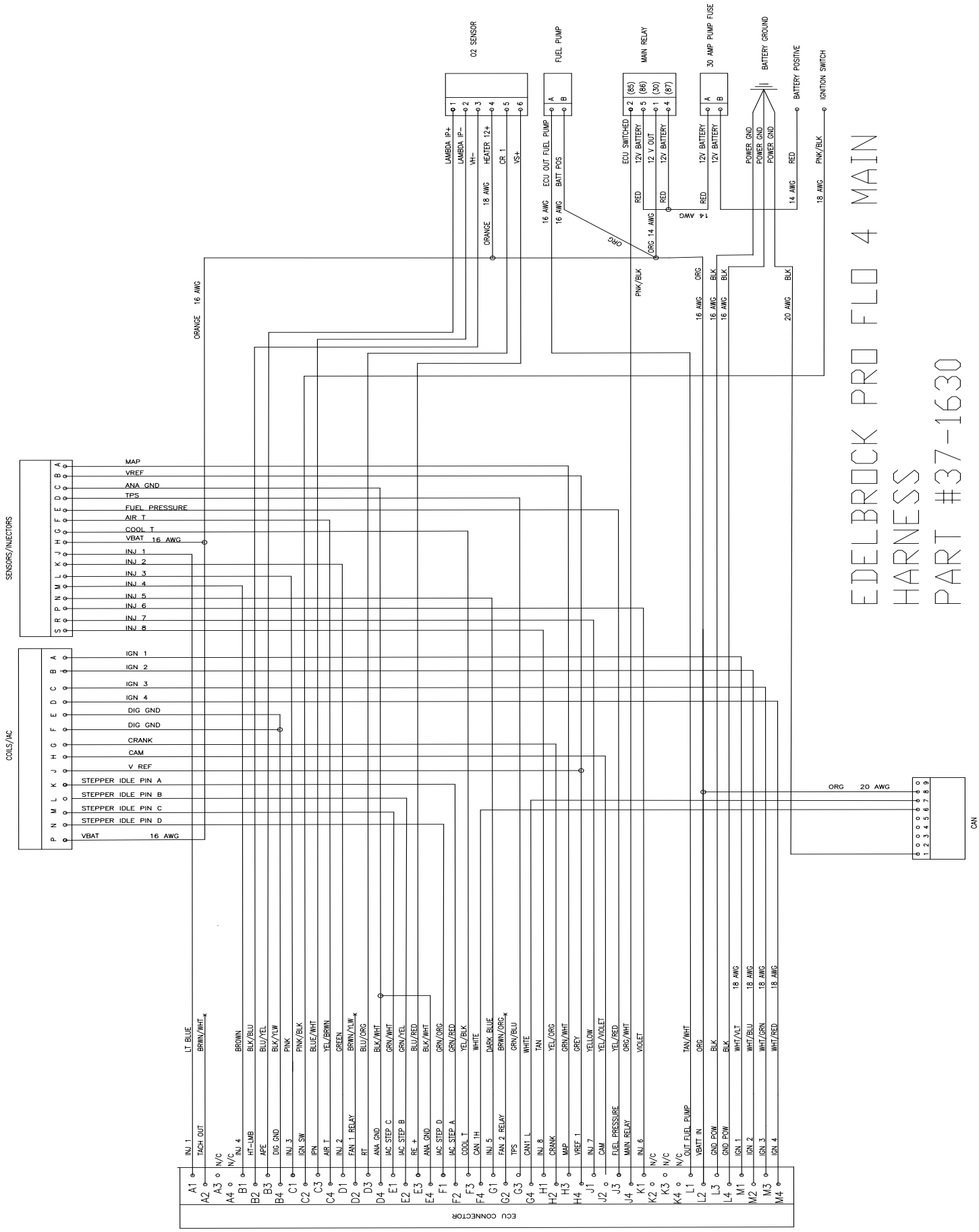
EDELBROCK PRO FLO 4 MAIN
HARNESS
PART #37-1630
SENSORS/INJECTORS
COILS/IAC
ECU CONNECTOR
CAN
O2 SENSOR
FUEL PUMP
MAIN RELAY
30 AMP PUMP FUSE
BATTERY GROUND
BATTERY POSITIVE
IGNITION SWITCH
LAMBDA IP+
LAMBDA IP-
VH-
HEATER 12+
CR 1
VS+
ECU OUT FUEL PUMP
BATT POS
ECU SWITCHED
12V BATTERY
12 V OUT
POWER GND
MAP
VREF
ANA GND
TPS
FUEL PRESSURE
AIR T
COOL T
VBAT 16 AWG
INJ 1
INJ 2
INJ 3
INJ 4
INJ 5
INJ 6
INJ 7
INJ 8
IGN 1
IGN 2
IGN 3
IGN 4
DIG GND
CRANK
CAM
V REF
STEPPER IDLE PIN A
STEPPER IDLE PIN B
STEPPER IDLE PIN C
STEPPER IDLE PIN D
VBAT 16 AWG
ORANGE 16 AWG
ORG 20 AWG
INJ 1
TACH OUT
N/C
INJ 4
HT-LMB
APE
DIG GND
INJ 3
IGN SW
IPN
AIR T
INJ 2
FAN 1 RELAY
RT
ANA GND
IAC STEP C
IAC STEP B
PE +
ANA GND
IAC STEP D
IAC STEP A
COOL T
CAN 1H
INJ 5
FAN 2 RELAY
TPS
CAN1 L
INJ 8
CRANK
MAP
VREF 1
INJ 7
CAM
FUEL PRESSURE
MAIN RELAY
INJ 6
OUT FUEL PUMP
VBATT IN
GND POW
GND POW
IGN 1
IGN 2
IGN 3
IGN 4

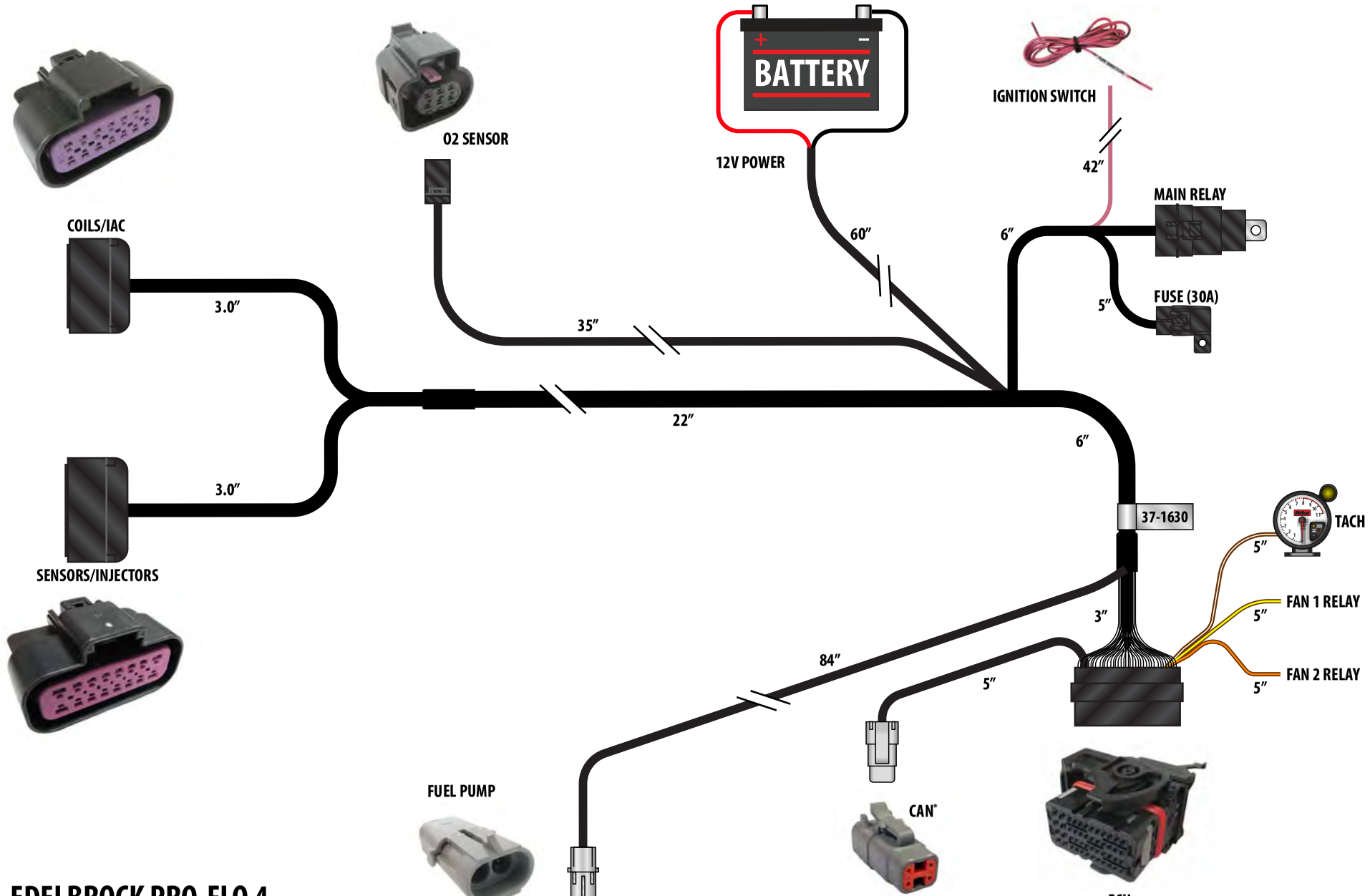


# EDELBROCK PRO-FLO 4
# MAIN HARNESS
# PART# 37-1630

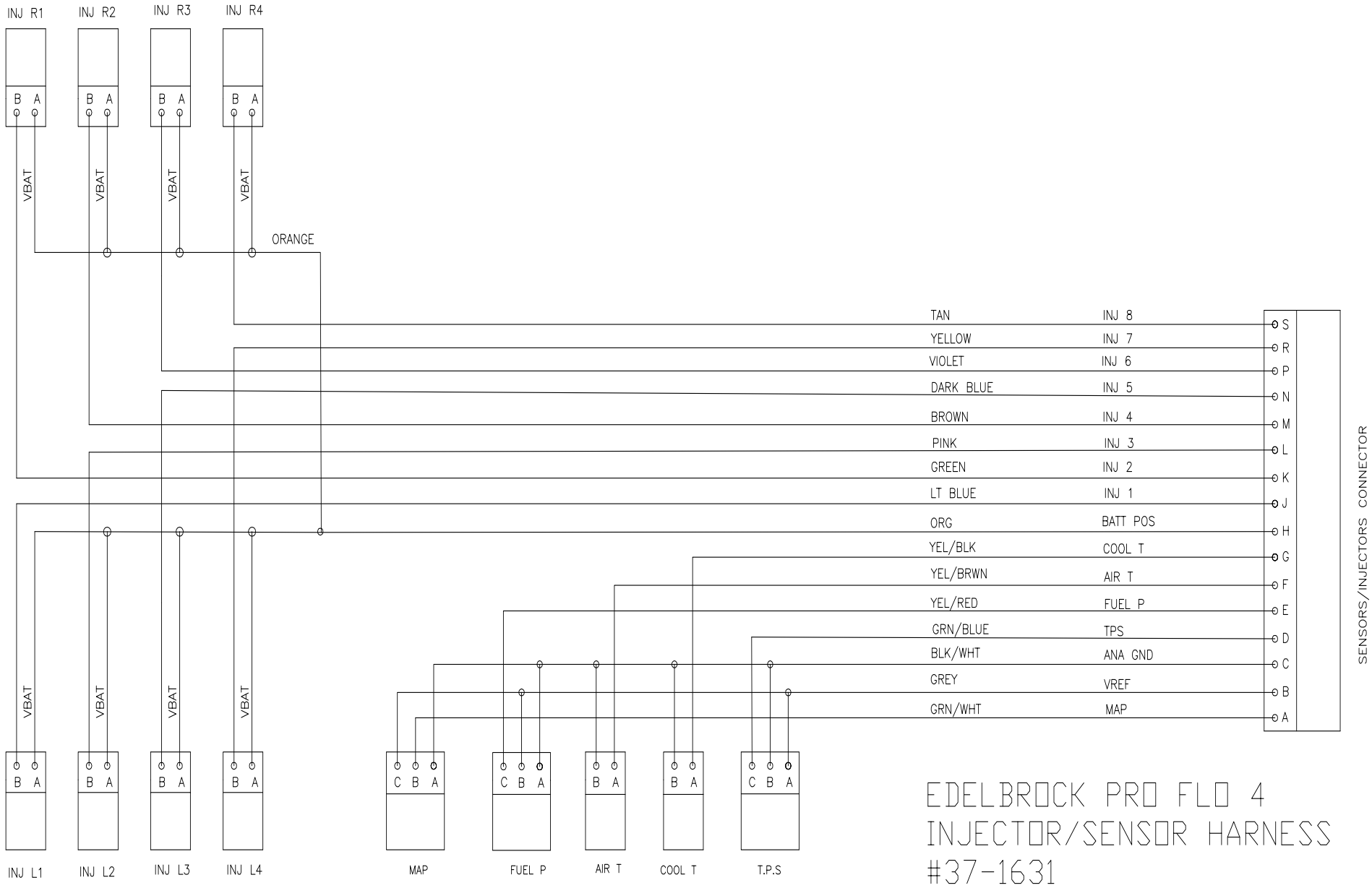


EDELBROCK PRO FLO 4
INJECTOR/SENSOR HARNESS
#37-1631

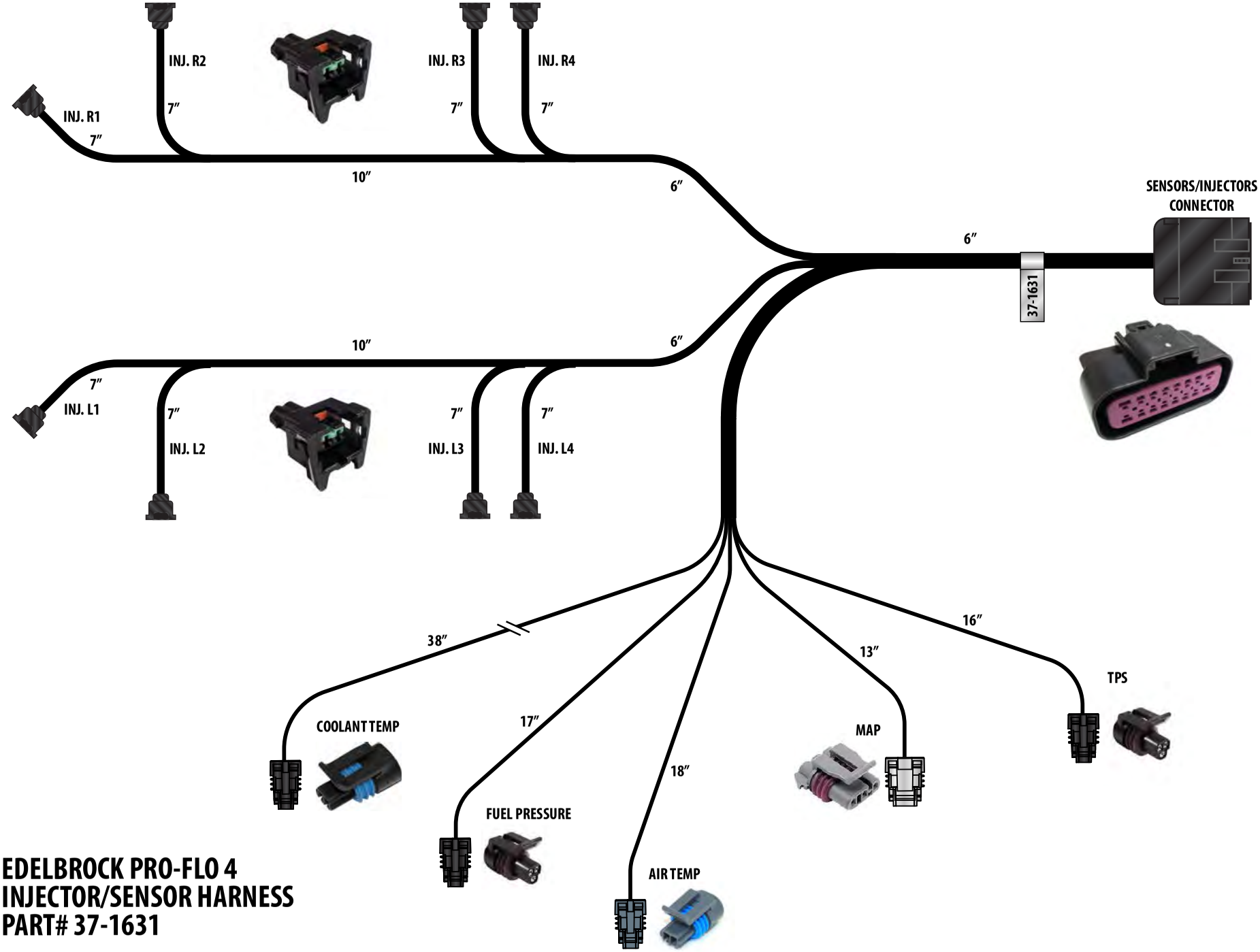


# EDELBROCK PRO-FLO 4 INJECTOR/SENSOR HARNESS PART# 37-1631

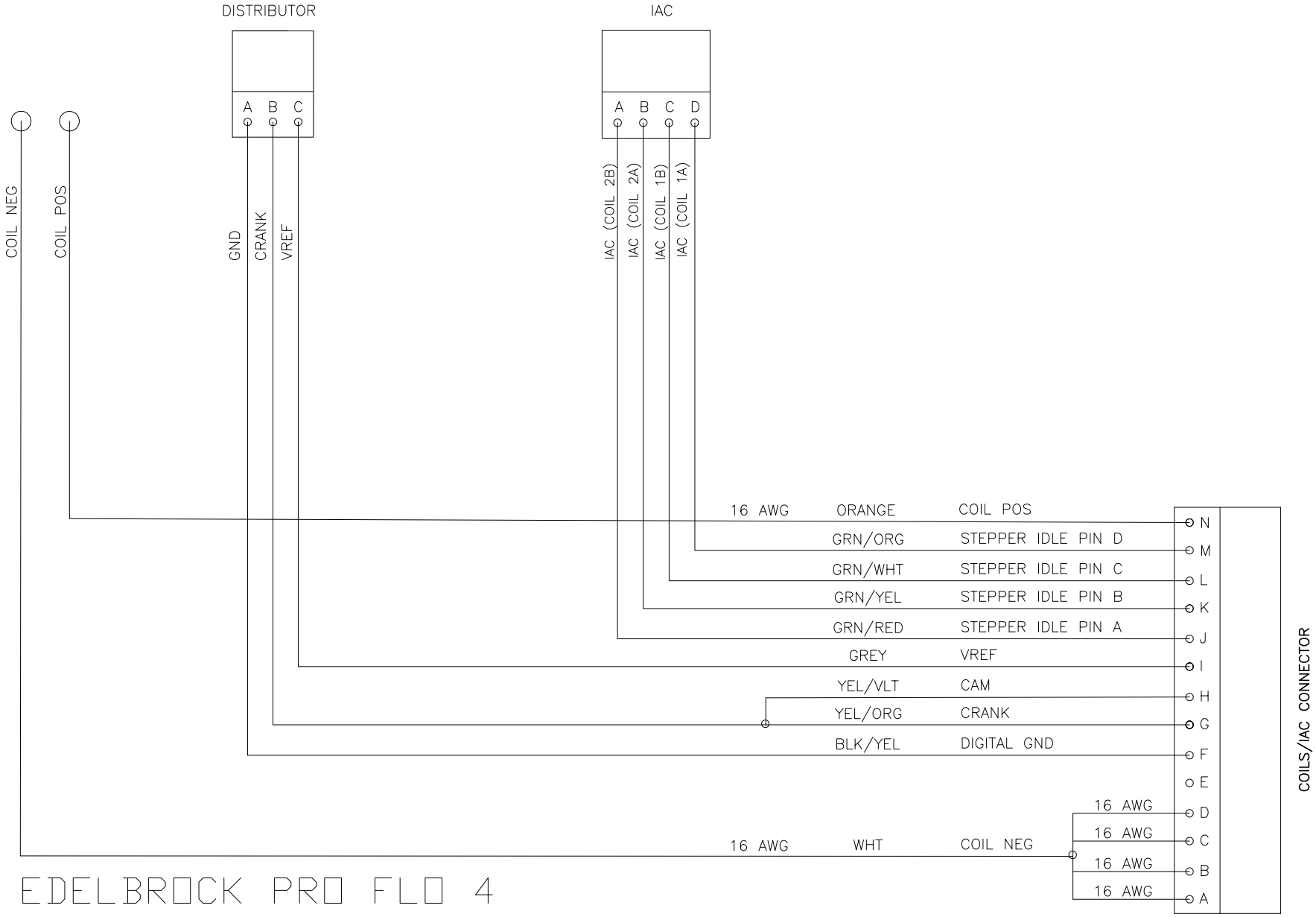


EDELBROCK PRO FLO 4
IAC/IGNITION HARNESS
#37-1634

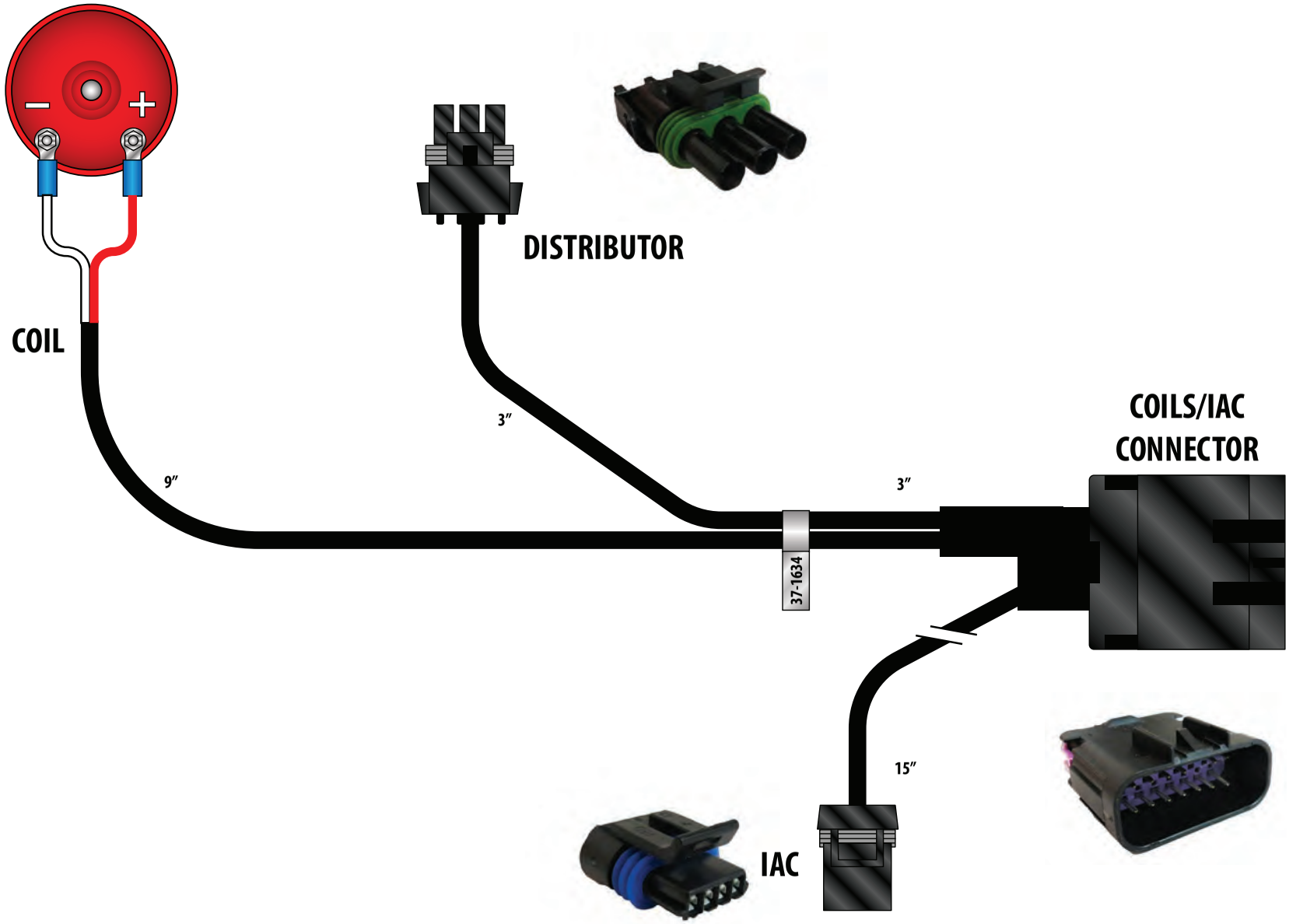


**EDELBROCK PRO-FLO 4**
**IAC/IGNITION HARNESS**
**PART# 37-1634**

# TYPICAL PRO-FLO 4 EFI WITH CDI BOX EXAMPLE

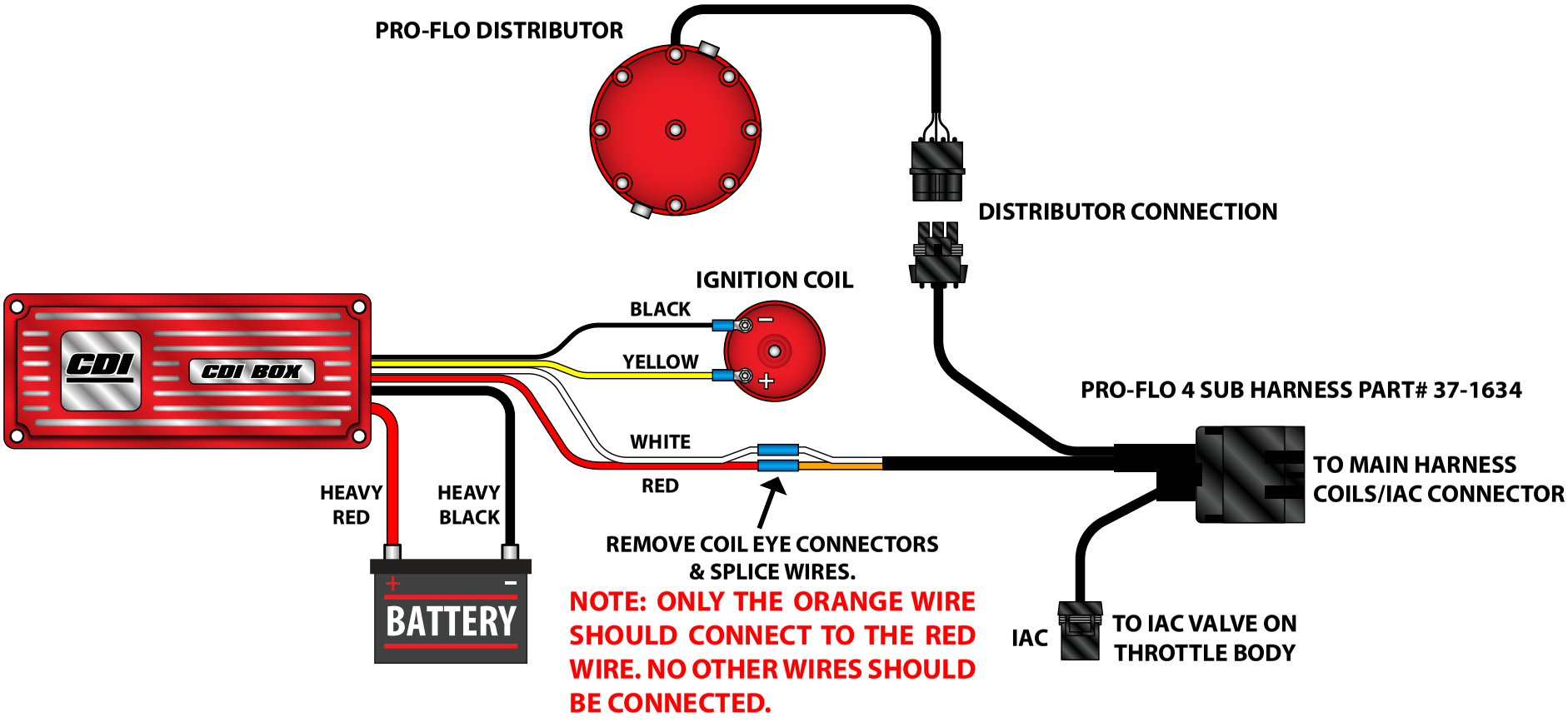


SCHEMATIC FOR REFERENCE ONLY
REFER TO CDI MANUFACTURER INSTRUCTIONS FOR MORE DETAIL

# PRO-FLO 4 SETUP WIZARD MAP MATRIX - NATURALLY ASPIRATED

| CAL. I.D | FUEL PRESSURE | CUBIC INCHES RANGE | CATEGORY | CAMSHAFT DURATION @ 0.050 LIFT | GAUGE PRESSURE. IDLE VACUUM | INJECTOR SIZE | HP Level |
|---|---|---|---|---|---|---|---|
| 5000 | 43 PSI | 280-330 | STOCK | 210 OR LESS | 20.0 - 16.0 | 29 | 400 |
| 5002 | 43 PSI | 280-330 | MILD | 210 TO 230 DEG. | 16.0 - 12.0 | 29 | 400 |
| 5003 | 43 PSI | 280-330 | RACE | 230 OR GREATER | 12.0 - 5.0 | 29 | 400 |
| 5004 | 58 PSI | 280-330 | RACE | 230 OR GREATER | 12.0 - 5.0 | 29 | 450 |
| 5006 | 43 PSI | 331-380 | STOCK | 210 OR LESS | 20.0 - 16.0 | 29 | 400 |
| 5008 | 43 PSI | 331-380 | MILD | 210 TO 230 DEG. | 16.0 - 12.0 | 29 | 400 |
| 5009 | 58 PSI | 331-380 | MILD | 210 TO 230 DEG. | 16.0 - 12.0 | 29 | 450 |
| 5010 | 58 PSI | 331-380 | RACE | 230 OR GREATER | 12.0 - 5.0 | 29 | 450 |
| 5011 | 43 PSI | 331-380 | STOCK | 210 OR LESS | 20.0 - 16.0 | 35 | 450 |
| 5013 | 43 PSI | 331-380 | MILD | 210 TO 230 DEG. | 16.0 - 12.0 | 35 | 450 |
| 5014 | 58 PSI | 331-380 | MILD | 210 TO 230 DEG. | 16.0 - 12.0 | 35 | 550 |
| 5015 | 43 PSI | 331-380 | RACE | 230 OR GREATER | 12.0 - 5.0 | 35 | 450 |
| 5016 | 58 PSI | 331-380 | RACE | 230 OR GREATER | 12.0 - 5.0 | 35 | 550 |
| 5065 | 58 PSI | 331-380 | RACE | 230 OR GREATER | 12.0 - 5.0 | 42 | 625 |
| 5017 | 43 PSI | 381-405 | STOCK | 210 OR LESS | 20.0 - 16.0 | 29 | 400 |
| 5019 | 58 PSI | 381-405 | MILD | 210 TO 230 DEG. | 16.0 - 12.0 | 29 | 450 |
| 5020 | 58 PSI | 381-405 | RACE | 230 OR GREATER | 12.0 - 5.0 | 29 | 450 |
| 5021 | 43 PSI | 381-405 | STOCK | 210 OR LESS | 20.0 - 16.0 | 35 | 450 |
| 5023 | 43 PSI | 381-405 | MILD | 210 TO 230 DEG. | 16.0 - 12.0 | 35 | 450 |
| 5024 | 58 PSI | 381-405 | MILD | 210 TO 230 DEG. | 16.0 - 12.0 | 35 | 550 |
| 5025 | 58 PSI | 381-405 | RACE | 230 OR GREATER | 12.0 - 5.0 | 35 | 550 |
| 5026 | 43 PSI | 406-439 | STOCK | 210 OR LESS | 20.0 - 16.0 | 35 | 450 |
| 5028 | 43 PSI | 406-439 | MILD | 210 TO 230 DEG. | 16.0 - 12.0 | 35 | 450 |
| 5029 | 58 PSI | 406-439 | MILD | 210 TO 230 DEG. | 16.0 - 12.0 | 35 | 550 |
| 5030 | 58 PSI | 406-439 | RACE | 230 OR GREATER | 12.0 - 5.0 | 35 | 550 |
| 5031 | 58 PSI | 406-439 | RACE | 230 OR GREATER | 12.0 - 5.0 | 42 | 625 |
| 5032 | 43 PSI | 440-480 | STOCK | 210 OR LESS | 20.0 - 16.0 | 35 | 450 |
| 5082 | 58 PSI | 440-480 | STOCK | 210 OR LESS | 20.0 - 16.0 | 42 | 625 |
| 5033 | 43 PSI | 440-480 | MILD | 210 TO 230 DEG. | 16.0 - 12.0 | 35 | 550 |
| 5083 | 58 PSI | 440-480 | MILD | 210 TO 230 DEG. | 16.0 - 12.0 | 42 | 625 |
| 5034 | 58 PSI | 440-480 | RACE | 230 OR GREATER | 12.0 - 5.0 | 35 | 550 |
| 5035 | 58 PSI | 440-480 | RACE | 230 OR GREATER | 12.0 - 5.0 | 42 | 625 |
| 5036 | 58 PSI | 481-510 | STOCK | 210 OR LESS | 20.0 - 16.0 | 35 | 550 |
| 5037 | 58 PSI | 481-510 | MILD | 210 TO 230 DEG. | 16.0 - 12.0 | 35 | 550 |
| 5038 | 43 PSI | 481-510 | RACE | 230 OR GREATER | 12.0 - 5.0 | 60 | 800 |
| 5039 | 43 PSI | 511-565 | RACE | 230 OR GREATER | 12.0 - 5.0 | 60 | 800 |

# PRO-FLO 4 SETUP WIZARD MAP MATRIX - FORCED INDUCTION

| CAL. I.D | FUEL PRESSURE | CUBIC INCHES RANGE | CATEGORY | CAMSHAFT DURATION @ 0.050 LIFT | GAUGE PRESSURE. IDLE VACUUM | INJECTOR SIZE | HP Level |
|---|---|---|---|---|---|---|---|
| 5100 | 43 PSI | 280-330 | MILD | 210 TO 230 DEG. | 16.0 - 12.0 | 60 | 625 |
| 5101 | 43 PSI | 280-330 | RACE | 230 OR GREATER | 12.0 - 5.0 | 60 | 625 |
| 5102 | 58 PSI | 280-330 | RACE | 230 OR GREATER | 12.0 - 5.0 | 60 | 750 |
| 5103 | 43 PSI | 331-380 | MILD | 210 TO 230 DEG. | 16.0 - 12.0 | 60 | 625 |
| 5104 | 58 PSI | 331-380 | MILD | 210 TO 230 DEG. | 16.0 - 12.0 | 60 | 750 |
| 5105 | 43 PSI | 331-380 | RACE | 230 OR GREATER | 12.0 - 5.0 | 60 | 625 |
| 5106 | 58 PSI | 331-380 | RACE | 230 OR GREATER | 12.0 - 5.0 | 60 | 750 |
| 5107 | 43 PSI | 331-380 | RACE | 230 OR GREATER | 12.0 - 5.0 | 80 | 850 |
| 5108 | 43 PSI | 381-405 | MILD | 210 TO 230 DEG. | 16.0 - 12.0 | 60 | 625 |
| 5109 | 58 PSI | 381-405 | MILD | 210 TO 230 DEG. | 16.0 - 12.0 | 60 | 750 |
| 5110 | 43 PSI | 381-405 | RACE | 230 OR GREATER | 12.0 - 5.0 | 60 | 625 |
| 5111 | 58 PSI | 381-405 | RACE | 230 OR GREATER | 12.0 - 5.0 | 60 | 750 |
| 5112 | 43 PSI | 381-405 | RACE | 230 OR GREATER | 12.0 - 5.0 | 80 | 850 |
| 5113 | 58 PSI | 406-439 | MILD | 210 TO 230 DEG. | 16.0 - 12.0 | 60 | 750 |
| 5114 | 43 PSI | 406-439 | MILD | 210 TO 230 DEG. | 16.0 - 12.0 | 80 | 850 |
| 5115 | 43 PSI | 406-439 | RACE | 230 OR GREATER | 12.0 - 5.0 | 80 | 850 |
| 5116 | 58 PSI | 406-439 | RACE | 230 OR GREATER | 12.0 - 5.0 | 80 | 975 |
| 5117 | 58 PSI | 440-480 | MILD | 210 TO 230 DEG. | 16.0 - 12.0 | 60 | 750 |
| 5118 | 43 PSI | 440-480 | MILD | 210 TO 230 DEG. | 16.0 - 12.0 | 80 | 850 |
| 5119 | 43 PSI | 440-480 | RACE | 230 OR GREATER | 12.0 - 5.0 | 80 | 850 |
| 5120 | 58 PSI | 440-480 | RACE | 230 OR GREATER | 12.0 - 5.0 | 80 | 975 |
| 5121 | 43 PSI | 481-510 | MILD | 210 TO 230 DEG. | 16.0 - 12.0 | 80 | 850 |
| 5122 | 58 PSI | 481-510 | RACE | 230 OR GREATER | 12.0 - 5.0 | 80 | 975 |
| 5123 | *65 PSI* | 481-510 | RACE | 230 OR GREATER | 12.0 - 5.0 | 80 | 1050 |
| 5124 | *65 PSI* | 511-565 | RACE | 230 OR GREATER | 12.0 - 5.0 | 80 | 1050 |

## NOTES

## WARRANTY

***Edelbrock warrants the Edelbrock Pro-Flo 4 EFI system to be free from defects in both workmanship and materials for a period of two years from date of purchase, provided that the product is properly installed and subjected to normal use and service, is not used for racing or competition purposes and that the product is not modified or altered in any way unless specified by our instructions. Our warranty service and repair facility is located at 2700 California Street, Torrance, CA 90503. Customers requiring warranty assistance should contact the dealer from whom they purchased the product. In turn, the dealer will contact Edelbrock, and we will determine the method of satisfying the warranty. Should Edelbrock determine that the product needs to be returned to the factory, it should be accompanied by proof of purchase and a clear description of the exact problem. The product must be returned freight pre-paid. If a thorough inspection of the product by the factory indicates defects in workmanship or material, our sole obligation shall be to repair or replace the product. This warranty covers only the product itself and not the cost of installation or removal.***

**EDELBROCK LLC SHALL NOT BE LIABLE FOR ANY AND ALL CONSEQUENTIAL DAMAGES OCCASIONED BY THE BREACH OF ANY WRITTEN OR IMPLIED WARRANTY PERTAINING TO THIS SALE, IN EXCESS OF THE PURCHASE PRICE OF THE PRODUCT SOLD.**

***If you have any questions regarding this product or installation, please contact our Technical Department from 7am-5pm, Pacific Standard Time, Monday through Friday at: 800-416-8628.***

| | | | | | | | | | | | | | | |
|---|---|---|---|---|---|---|---|---|---|---|---|---|---|---|
| 12 | 13 | 13.5 | 14 | 14 | 7 | 8 | 9 | 10 | 11 | 11 | 11 | 11 | 11 | 11 |
| 14 | 15 | 15.5 | 16 | 16 | 8 | 9 | 10 | 11 | 12 | 12 | 12 | 12 | 12 | 12 |
| 16 | 17 | 17.5 | 18 | 18 | 9 | 10 | 11 | 12 | 13 | 13 | 13 | 13 | 13 | 14 |
| 17 | 18 | 18.5 | 19 | 19 | 10 | 11 | 12 | 13 | 14 | 14 | 14 | 14 | 14 | 14 |
| 18 | 19 | 19.5 | 20 | 20 | 11 | 12 | 13 | 14 | 14 | 14 | 14 | 14 | 14 | 15 |
| 19 | 20 | 20.5 | 21 | 21 | 12 | 13 | 14 | 14 | 14 | 14 | 14 | 14 | 15 | 16 |
| 21 | 22 | 22.5 | 23 | 23 | 13 | 14 | 15 | 15 | 15 | 15 | 15 | 16 | 17 | 18 |
| 22 | 22 | 23.5 | 24 | 24 | 14 | 15 | 15 | 16 | 16 | 17 | 17 | 18 | 19 | 20 |
| 30 | 30 | 30 | 30 | 30 | 17 | 17 | 17 | 19 | 22 | 25 | 27 | 29 | 29 | 29 |
| 32 | 32 | 32 | 32 | 32 | 17 | 17 | 17 | 19 | 23 | 25 | 28 | 29 | 30 | 31 |
| 33 | 34 | 34 | 34 | 34 | 17 | 17 | 17 | 19 | 24 | 26 | 29 | 30 | 31 | 32 |
| 35 | 35 | 36 | 36 | 36 | 17 | 0 | 0 | 0 | 0 | 0 | 0 | 0 | 0 | 0 |
| 1 | 2 | 3 | 3.5 | 4 | 4 | 0 | 0 | 0 | 0 | 0 | 0 | 0 | 0 | 0 |
| 3 | 4 | 5 | 5.5 | 6 | 6 | 1 | 2 | 3 | 4 | 4 | 4 | 4 | 4 | 4 |
| 6 | 6 | 6 | 6.5 | 7 | 7 | 7 | 8 | 9 | 10 | 11 | 11 | 11 | 11 | 11 |
| 11 | 12 | 13 | 13.5 | 14 | 14 | 8 | 9 | 10 | 11 | 12 | 12 | 12 | 12 | 12 |
| 13 | 14 | 15 | 15.5 | 16 | 16 | 9 | 10 | 11 | 12 | 13 | 13 | 13 | 13 | 13 |
| 15 | 16 | 17 | 17.5 | 18 | 18 | 10 | 11 | 12 | 13 | 14 | 14 | 14 | 14 | 14 |
| 16 | 17 | 18 | 18.5 | 19 | 19 | 11 | 12 | 13 | 14 | 14 | 14 | 14 | 14 | 14 |
| 17 | 18 | 19 | 19.5 | 20 | 20 | 12 | 13 | 14 | 14 | 14 | 14 | 14 | 14 | 15 |
| 18 | 19 | 20 | 20.5 | 21 | 21 | 13 | 14 | 15 | 15 | 15 | 15 | 15 | 16 | 17 |
| 20 | 21 | 22 | 22.5 | 23 | 23 | 14 | 15 | 15 | 16 | 16 | 17 | 17 | 18 | 19 |
| 21 | 22 | 22 | 23.5 | 24 | 24 | 17 | 17 | 17 | 19 | 22 | 25 | 27 | 29 | 29 |
| 29 | 30 | 30 | 30 | 30 | 30 | 17 | 17 | 17 | 19 | 23 | 25 | 28 | 29 | 30 |
| 31 | 32 | 32 | 32 | 32 | 32 | 17 | 17 | 17 | 19 | 24 | 26 | 29 | 30 | 31 |
| 33 | 33 | 34 | 34 | 34 | 34 | 17 | 17 | 17 | 19 | 25 | 28 | 30 | 31 | 32 |
| 34 | 35 | 35 | 36 | 36 | 36 | 17 | 17 | 17 | 19 | 25 | 28 | 30 | 31 | 32 |
| 34 | 35 | 35 | 36 | 0 | 0 | 0 | 0 | 0 | 0 | 0 | 0 | 0 | 0 | 1 |
| 3 | 3.5 | 4 | 4 | 0 | 0 | 0 | 0 | 0 | 0 | 0 | 0 | 0 | 1 | 3 |
| 5 | 5.5 | 6 | 6 | 1 | 2 | 3 | 4 | 4 | 4 | 4 | 4 | 4 | 4 | 6 |
| 6 | 6.5 | 7 | 7 | 7 | 8 | 9 | 10 | 11 | 11 | 11 | 11 | 11 | 11 | 11 |
| 13 | 13.5 | 14 | 14 | 8 | 9 | 10 | 11 | 12 | 12 | 12 | 12 | 12 | 12 | 13 |
| 15 | 15.5 | 16 | 16 | 9 | 10 | 11 | 12 | 13 | 13 | 13 | 13 | 13 | 14 | 15 |
| 17 | 17.5 | 18 | 18 | 10 | 11 | 12 | 13 | 14 | 14 | 14 | 14 | 14 | 14 | 16 |
| 18 | 18.5 | 19 | 19 | 11 | 12 | 13 | 14 | 14 | 14 | 14 | 14 | 14 | 15 | 17 |
| 19 | 19.5 | 20 | 20 | 12 | 13 | 14 | 14 | 14 | 14 | 14 | 14 | 15 | 16 | 18 |
| 20 | 20.5 | 21 | 21 | 13 | 14 | 15 | 15 | 15 | 15 | 15 | 16 | 17 | 18 | 20 |
| 22 | 22.5 | 23 | 23 | 14 | 15 | 15 | 16 | 16 | 17 | 17 | 18 | 19 | 20 | 21 |
| 22 | 23.5 | 24 | 24 | 17 | 17 | 17 | 19 | 22 | 25 | 27 | 29 | 29 | 29 | 29 |
| 30 | 30 | 30 | 30 | 17 | 17 | 17 | 19 | 23 | 25 | 28 | 29 | 30 | 31 | 31 |
| 32 | 32 | 32 | 32 | 17 | 17 | 17 | 19 | 24 | 26 | 29 | 30 | 31 | 32 | 33 |
| 34 | 34 | 34 | 34 | 17 | [illegible] | [illegible] | [illegible] | [illegible] | [illegible] | 30 | 31 | 32 | 33 | 34 |
| 35 | 36 | 36 | 36 | 17 | [illegible] | [illegible] | [illegible] | [illegible] | [illegible] | 30 | 31 | 32 | 33 | 34 |
| 1 | 2 | 3 | 3.5 | [illegible] | [illegible] | [illegible] | [illegible] | [illegible] | [illegible] | 0 | 0 | 0 | 0 | 0 |
| 3 | 4 | 5 | 5.5 | [illegible] | [illegible] | [illegible] | [illegible] | [illegible] | [illegible] | 0 | 0 | 0 | 0 | 0 |
| 6 | 6 | 6 | 6.5 | [illegible] | [illegible] | [illegible] | [illegible] | [illegible] | [illegible] | 4 | 4 | 4 | 4 | 4 |
| 11 | 12 | 13 | 13.5 | [illegible] | [illegible] | [illegible] | [illegible] | [illegible] | [illegible] | 11 | 11 | 11 | 11 | 11 |
| 13 | 14 | 15 | 15.5 | [illegible] | [illegible] | [illegible] | [illegible] | [illegible] | [illegible] | 12 | 12 | 12 | 12 | 12 |
| [illegible] | [illegible] | [illegible] | [illegible] | [illegible] | [illegible] | [illegible] | [illegible] | [illegible] | [illegible] | [illegible] | [illegible] | [illegible] | [illegible] | [illegible] |


Olive Branch, MS 38654
800-416-8628 • edelbrock.com


BROCHURE: 63-35760 . REV 8/19/21 -MH


©2022 EDELBROCK GROUP